SSi Super Systems

Instruction Manual

P/N 31090

20 PQ
Programmer - Controller

170.IU0.20Q.S00

INDEX

MOUNTING REQUIREMENTS 1
OUTLINE AND CUT OUT DIMENSIONS 2
CONNECTION DIAGRAMS 4
PRELIMINARY HARDWARE SETTINGS 19
SECURITY CODE SETTING MODE 23
RUN TIME AND CONFIGURATION MODES 26
GENERAL NOTE ABOUT GRAPHIC SYMBOLS USED FOR MNEMONIC CODE VISUALIZATION. 26
KEYBOARD DESCRIPTION 27
CONFIGURATION MODE 28
MONITOR MODE 29
MODIFY MODE 30
RUN TIME MODE 68
PRELIMINARY 68
CONTROL PARAMETERS 69
CONTROL PARAMETERS PROTECTION 69
CONTROL PARAMETERS MODIFICATION. 79
PROGRAMMER MODE 101
BARGRAPH DESCRIPTION 104
INDICATORS 105
DISPLAY FUNCTION DURING PROGRAMMER MODE 106
OUTPUT POWER OFF FUNCTION 109
CLOCK CALENDAR 110
OUT FAILURE DETECTION FUNCTION (OFD) 111
SERIAL LINK 111
LAMP TEST 112
MANUAL MODE 112
DIRECT ACCESS TO THE SET POINT 113
GENERAL NOTES ABOUT PROGRAM EDITING 114
EDIT MODE 114
SIMPLE PROGRAM MANAGEMENT 122
LINKED PROGRAM MANAGEMENT 125
HOW TO CHECK A PROGRAM 126
HOW TO RUN A PROGRAM (SIMPLE OR LINKED) .. 127
ACTIONS AVAILABLE DURING RUNNING MODE 128
CONTOLLER MODE 131
DISPLAY FUNCTION DURING CONTROLLER MODE 132
INDICATORS FUNCTION DURING CONTROLLER MODE 134
DIRECT ACCESS TO THE SET POINT 134
SMART FUNCTION 135
OUTPUT POWER OFF FUNCTION 136
ERROR MESSAGES 137
GENERAL INFORMATIONS 142
MAINTENANCE 151
DEFAULT PARAMETERS A.1
CODING A.15

MOUNTING REQUIREMENTS

This instrument is intended for permanent installation, for indoor use only, in an electrical panel which encloses the rear housing, exposed terminals and wiring on the back.
Select a location, for instrument mounting, where minimum vibrations are present and the ambient temperature is within 0 and 50 °C (32 and 122 °F).
The instrument can be mounted on a panel up to 15 mm thick with a cutout of 92 x 92 mm (20 PQ).
For outline and cutout dimensions refer to Fig. 2.
The surface texture of the panel must be better than 6,3 μm.
The instrument is shipped with rubber panel gasket.
To assure the IP65 and NEMA 4 protection, insert the panel gasket between the instrument and the panel as shown in fig. 1.
While holding the instrument against the panel proceed as follows:

1) insert the gasket in the instrument case;
2) insert the instrument in the panel cutout;
3) pushing the instrument against the panel;
4) insert the mounting brackets as shown in fig.1;
5) with a screwdriver, turn the screws with a torque between 0.3 and 0.4 Nm.

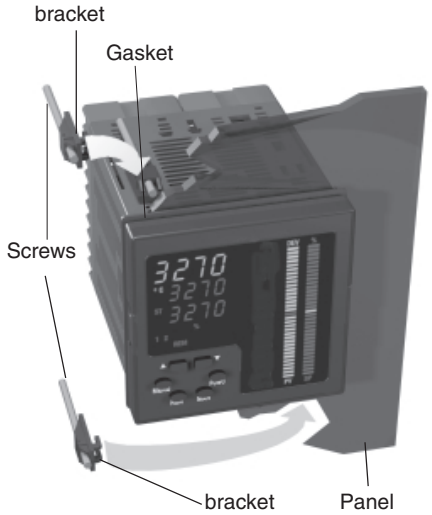

Fig. 1

OUTLINE AND CUT OUT DIMENSIONS

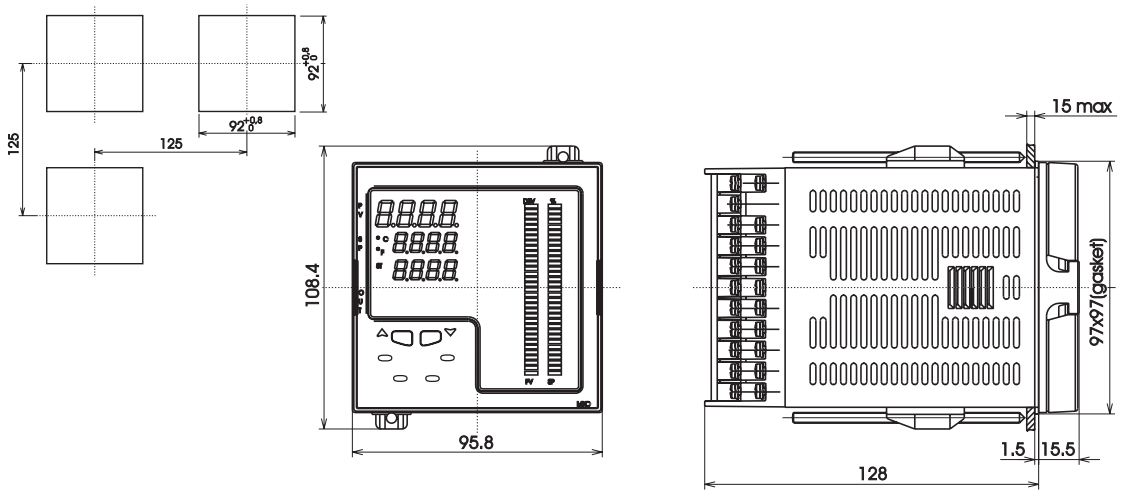

Fig. 2.B OUTLINE AND CUT-OUT DIMENSIONS

CONNECTION DIAGRAMS

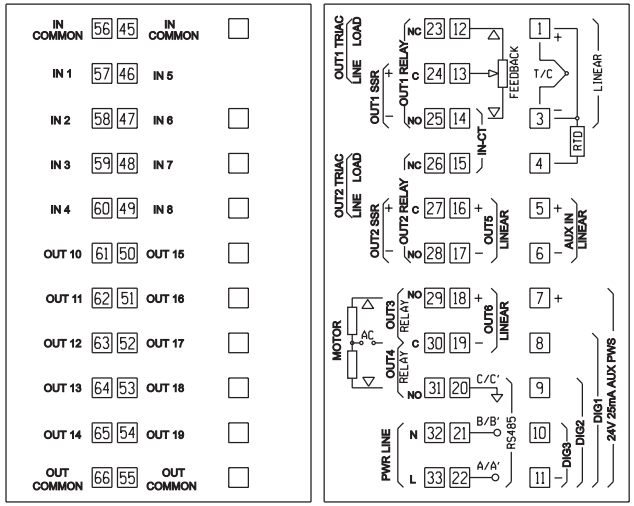

Fig. 3 REAR TERMINAL BLOCK

Connections are to be made with the instrument housing installed in its proper location.

A) MEASURING INPUTS

NOTE: Any external component (like zener barriers etc.) connected between sensor and input terminals may cause errors in measurement due to excessive and/or not balanced line resistance or possible leakage currents.

A.1) TC INPUT

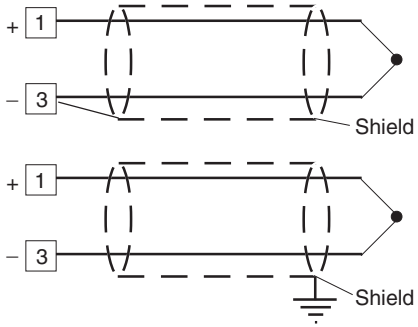

Fig. 4 THERMOCOUPLE INPUT WIRING

NOTES:

1) Don't run input wires together with power cables.
2) For TC wiring use proper compensating cable preferable shielded.
3) When a shielded cable is used, it should be connected at one point only.

A.2) RTD INPUT

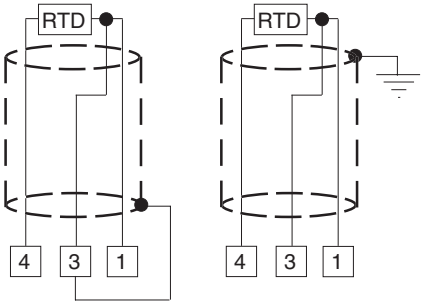

Fig. 5 RTD INPUT WIRING

NOTES:

1) Don't run input wires together with power cables.
2) Pay attention to the line resistance; a high line resistance may cause measurement errors.
3) When shielded cable is used, it should be grounded at one side only to avoid ground loop currents.
4) The resistance of the 3 wires must be the same.

A.3) LINEAR INPUT

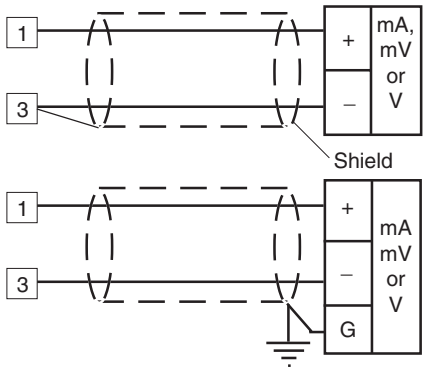

Fig. 6 mA, mV AND V INPUTS WIRING

NOTES:
1) Don't run input wires together with power cables.
2) Pay attention to the line resistance; a high line resistance may cause measurement errors.
3) When shielded cable is used, it should be grounded at one side only to avoid ground loop currents.
4) The input impedance is equal to:
   < 5 Ω for 20 mA input
   > 1 MΩ for 60 mV input
   > 200 kΩ for 5 V input
   > 400 kΩ for 10 V input

A.4) 2, 3 AND 4-WIRE TRANSMITTER INPUT

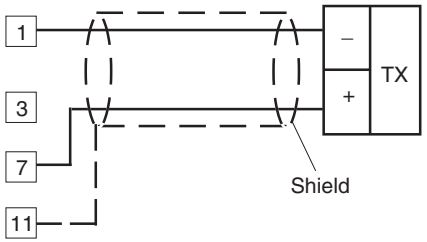

Fig. 7.A INPUTS WIRING FOR 2-WIRE TRANSMITTER

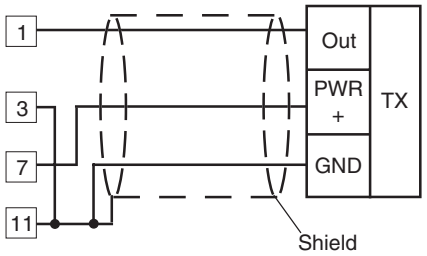

Fig. 7.B INPUTS WIRING FOR 3-WIRE TRANSMITTER

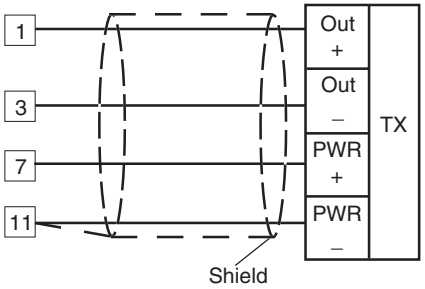

Fig. 7.C INPUTS WIRING FOR 4-WIRE TRANSMITTER

NOTES:
1) Don't run input wires together with power cables.
2) Pay attention to the line resistance; a high line resistance may cause measurement errors.
3) When shielded cable is used, it should be grounded at one side only to avoid ground loop currents.
4) The input impedance is lower than 5 Ω (20 mA input)

B) AUXILIARY INPUT

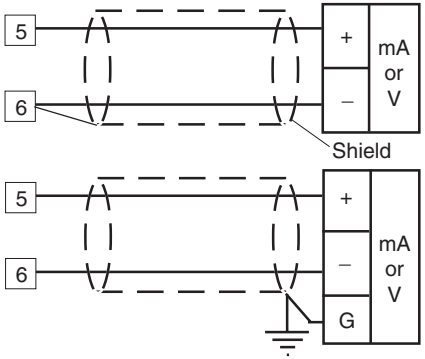

Fig. 8 AUXILIARY INPUT WIRING

NOTES:

1) This input is **not isolated** from measuring input. A double or reinforced insulation between instrument output and power supply must be assured by the external instrument.
2) Don't run input wires together with power cables.
3) Pay attention to the line resistance; a high line resistance may cause measurement errors.
4) When shielded cable is used, it should be grounded at one side only to avoid ground loop currents.
5) The input impedance is equal to:
   < 5 Ω for 20 mA input
   > 200 kΩ for 5 V input
   > 400 kΩ for 10 V input

C) LOGIC INPUTS

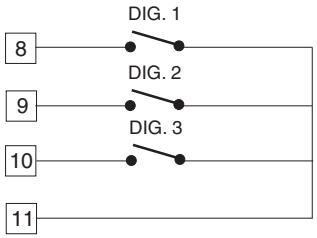

Fig. 9.A - LOGIC INPUTS DIG 1, 2, 3 WIRING

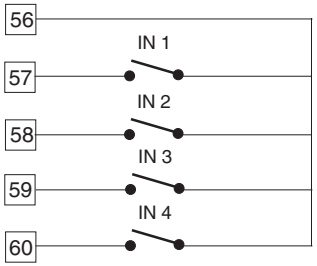

Fig. 9.B - LOGIC INPUTS IN 1, 2, 3 and 4 WIRING

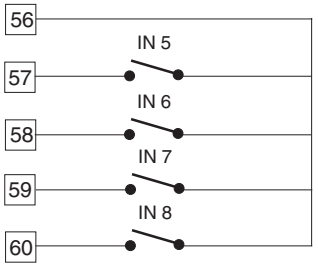

Fig. 9.C - LOGIC INPUTS IN 5, 6, 7 and 8 WIRING

NOTES:

1) Do not run logic input wiring together with power cables.
2) Use an external dry contact capable of switching 0.5 mA, 5 V DC.
3) The instrument needs 110 ms to recognize a contact status variation.
4) The logic inputs are **NOT** isolated by the measuring input. A double or reinforced insulation between instrument input and power line must be assured by the external element.

D) CURRENT TRANSFORMER INPUT

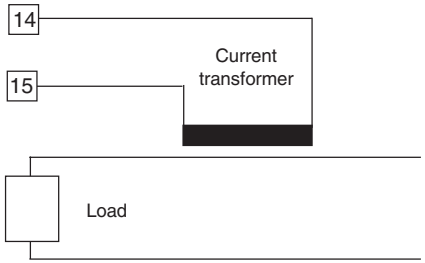

Fig. 10 CURRENT TRANSFORMER INPUT WIRING

This input allows you to measure and display the current running in the load, driven by a time proportional control output, during the ON and OFF periods of the output cycle time. By this feature it is also available the "Output failure detection" function (see page 110).

NOTES:

1) This input is **not isolated** from measuring input.
2) Do not run current transformer input wiring together with AC power cables.
3) The minimum active period to perform this measurement is equal to 120 ms.
4) The input impedance is equal to 20 Ω.

E.1) RELAY OUTPUTS

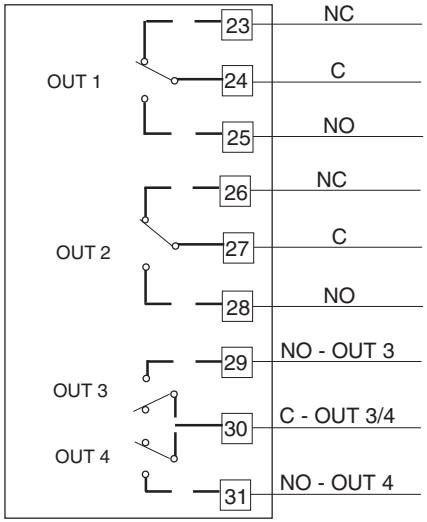

Fig. 11.A RELAY OUTPUTS 1,2,3 and 4 WIRING

The outputs from OUT 1 to OUT 4 are equipped with relays having contact rating equal to 3A/250V AC on resistive load.

WARNING: When OUT 3 and 4 are used as independent relay outputs the addition of the two currents must not exceed 3 A.

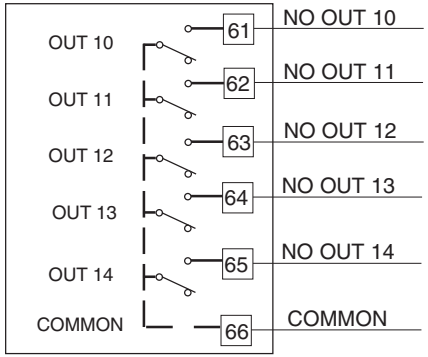

Fig. 11.B RELAY OUTPUTS 10 to 14 WIRING

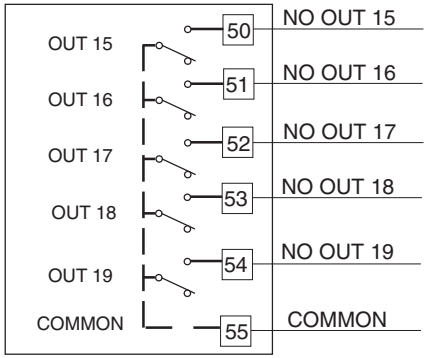

Fig. 11.C RELAY OUTPUTS 15 to 19 WIRING

The outputs from OUT 10 to 19 are equipped with relays having contact rating equal to 0.5A/250V AC on resistive load.

GENERAL NOTES ABOUT RELAY OUTPUT WIRING

1) To avoid electrical shock, connect power line at the end of the wiring procedure.
2) For power connections use No 16 AWG or larger wires rated for at last 75 °C.
3) Use copper conductors only.
4) Don't run input wires together with power cables.

For all relay outputs, the number of operations is 1 x 10^5 at specified rating.
All relay contacts are protected by varistor against inductive load with inductive component up to 0.5 A.

The following recommendations avoid serious problems which may occur, when using relay output for driving inductive loads.

INDUCTIVE LOADS

High voltage transients may occur switching inductive loads. Through the internal contacts these transients may introduce disturbances which can affect the performance of the instrument.
For all the outputs, the internal protection (varistor) assures a correct protection up to 0.5 A of inductive component.

The same problem may occur when a switch is used in series with the internal contacts as shown in Fig. 12.

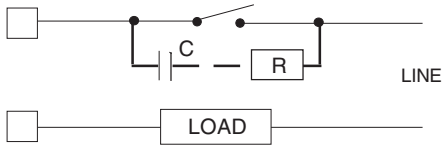

Fig. 12 EXTERNAL SWITCH IN SERIES WITH THE INTERNAL CONTACT

In this case it is recommended to install an additional RC network across the external contact as shown in Fig. 12
The value of capacitor (C) and resistor (R) are shown in the following table.

LOAD (mA)	C (μF)	R (Ω)	P. (W)	OPERATING VOLTAGE
<40 mA	0.047	100	1/2	260 V AC
<150 mA	0.1	22	2	260 V AC
<0.5 A	0.33	47	2	260 V AC

Anyway the cable involved in relay output wiring must be as far away as possible from input or communication cables.

E.2) VOLTAGE OUTPUTS FOR SSR DRIVE

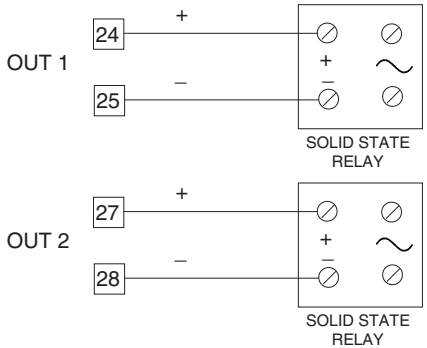

Fig. 13 SSR DRIVE OUTPUT WIRING

Logic level 0: Vout < 0.5 V DC.
Logic level 1:
14 V ± 20 % @ 20 mA
24 V ± 20 % @ 1 mA.
Maximum current = 20 mA.

NOTE: This output is not isolated.
A double or reinforced insulation between instrument output and power supply must be assured by the external solid state relay.

E.3) TRIAC OUTPUTS

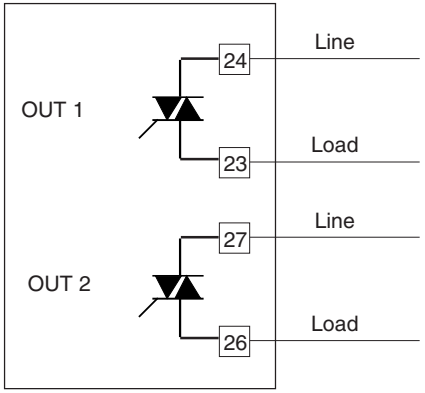

Fig. 14 TRIAC OUTPUT WIRING

Switching mode: isolated zero crossing type.
Rated current: from 50 mA to 1 A.
Rated voltage: from 24 V_{RMS} to 240 V_{RMS} -10 % +15 % (50/60Hz)
Load type: resistive load only

NOTES
1) To avoid electrical shock, connect power line at the end of the wiring procedure.
2) For power connections use No 16 AWG or larger wires rated for at last 75 °C.
3) Use copper conductors only.
4) Don't run input wires together with power cables.
5) This output is not fuse protected. Please, provide it externally using a fuse with a I^2t equal to128.

E.4) SERVOMOTOR OUTPUT

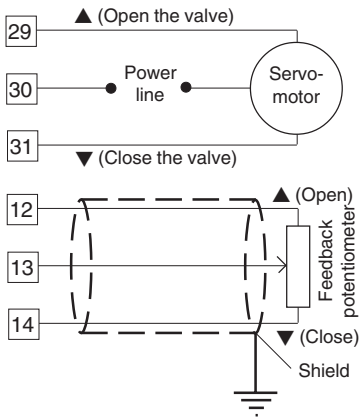

Fig. 15 SERVOMOTOR OUTPUT WIRING

The two relay output must be interlocked (see chapter "Preliminary hardware setting" paragraph "Out 3 and 4 selection").

NOTES:

1) Before connecting the instrument to the power line, make sure that line voltage and the load current are in accordance with the contact rating (3A/250V AC on resistive load).
2) To avoid electric shock, connect power line at the end of the wiring procedure.
3) For servomotor connections use No 16 AWG or larger wires rated for at last 75 °C.
4) Use copper conductors only.
5) Don't run input wires together with power cables.
6) For feedback potentiometer, use shielded cable with the shield connected to the earth at one point only.
7) The relay outputs are protected by varistors against inductive load with inductive component up to 0.5 A.

E.5) ANALOG OUTPUTS

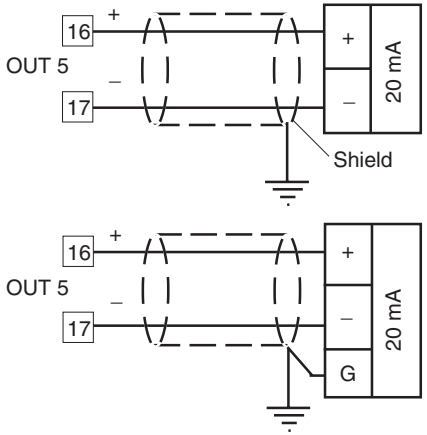

Fig. 16.A OUTPUT 5 WIRING

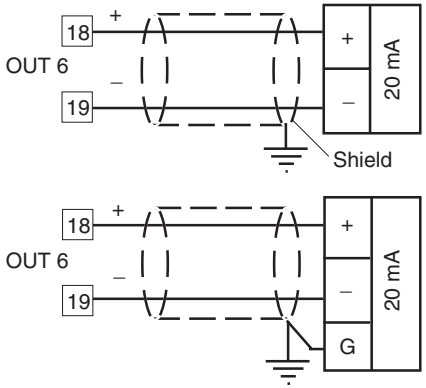

Fig. 16.B OUTPUT 6 WIRING

NOTE:
1) Do not run analog output wirings together with AC power cables.
2) Out 5 and 6 are isolated outputs.
3) The maximum load is equal to 600 Ω.

F) SERIAL INTERFACE

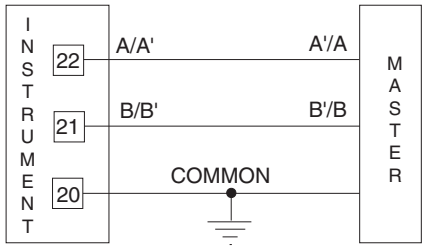

Fig. 17 - RS-485 WIRING
The cable length must not exceed 1.5 km at 9600 BAUD.

NOTES:

1) This is an isolated RS-485 serial interface.
2) The following report describes the signal sense of the voltage appearing across the interconnection cable as defined by EIA for RS-485.
   a) The " A " terminal of the generator shall be negative with respect to the " B " terminal for a binary 1 (MARK or OFF) state.
   b) The " A " terminal of the generator shall be positive with respect to the " B " terminal for a binary 0 (SPACE or ON).
3) The EIA standard establishes that by RS-485 interface it is possible to connect up to 30 devices with one remote master unit.
   The serial interface of these instruments is based on "High input impedance" transceivers; this solution allows you to connect up to 127 devices (based on the same transceiver type) with one remote master unit.

G) POWER LINE WIRING

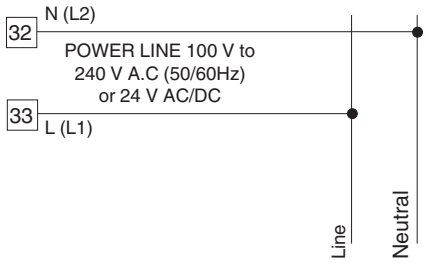

Fig. 18 POWER LINE WIRING

NOTES:

1) Before connecting the instrument to the power line, make sure that line voltage corresponds to the description on the identification label.
2) To avoid electrical shock, connect power line at the end of the wiring procedure.
3) For supply connections use No 16 AWG or larger wires rated for at last 75 °C.
4) Use copper conductors only.
5) Don't run input wires together with power cables.
6) For 24 V DC the polarity is a not care condition.
7) The power supply input is fuse protected by a sub miniature fuse rated T, 1A, 250 V.
   When fuse is damaged, it is advisable to verify the power supply circuit, so that it is necessary to send back the instrument to your supplier.
8) The safety requirements for Permanently Connected Equipment say:
   - a switch or circuit-breaker shall be included in the building installation;
   - it shall be in close proximity to the equipment and within easy reach of the operator;
   - it shall be marked as the disconnecting device for the equipment.

   NOTE: a single switch or circuit-breaker can drive more than one instrument.
9) When a neutral line is present please connect it to the 32 terminal.

PRELIMINARY HARDWARE SETTINGS

How to remove the instrument from its case

1) Switch off the instrument.
2) Push gently the lock A on the right.
3) While the lock A is maintained out, slide out the right side of the instrument (see fig. 19.a)

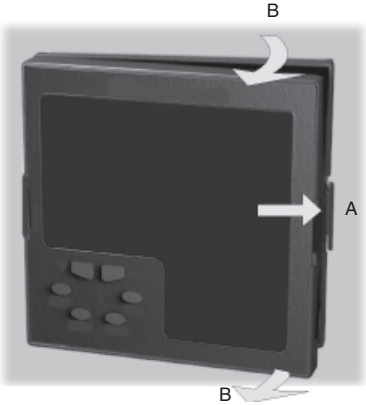

Fig. 19.a

4) Push gently the lock C on the left.
5) While the lock C is maintained out, slide out the instrument (see fig. 19.b)

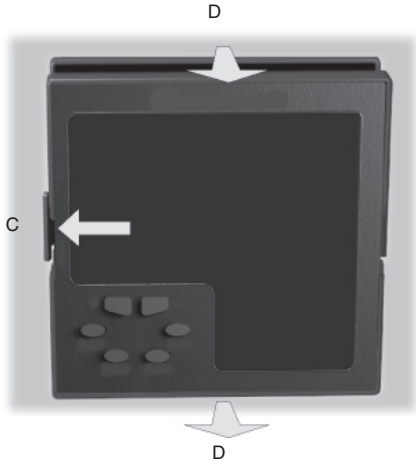

Fig. 19.b

MAIN INPUT SELECTION

Set J103 (see fig. 20) according to the desired input type as shown in the following table.

J103	INPUT TYPE				
	T/C, RTD	60 mV	5 V	10 V	20 mA
1-2	open	open	close	open	open
3-4	open	open	close	close	open
5-6	open	open	open	open	close
7-8	open	open	open	open	close
5-7	close	close	open	close	open
6-8	close	close	open	open	open

AUXILIARY INPUT SELECTION (option)

Set J102 (see fig. 20) according to the desired input type as shown in the following table.

J102	INPUT TYPE		
	5 V	10 V	20 mA
1-2	close	open	open
3-4	close	close	open
5-6	open	open	close
7-8	open	open	close
5-7	open	close	open
6-8	open	open	open

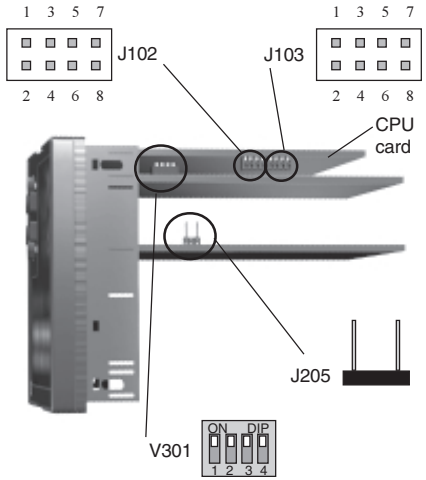

Fig. 20

OUTPUT 3 AND 4 SELECTION
Output 3 and 4 can be set as:
- 2 independent relay outputs
- 1 servomotor output with interlocked contact.

Set J204 (see fig. 21) and J205 (see fig. 20) according to the desired output type as shown in the following table.

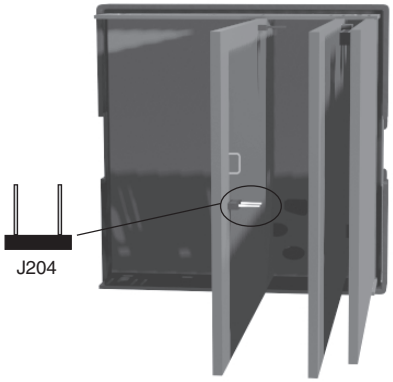

Fig.21

Output	J 204	J 205
Relay	close	open
Servo	open	close

NOTE: when the servomotor close loop or the servomotor open loop with valve position indication outputs is required, it will be necessary to set also V301 (see "IN CT/Feedback selection" paragraph)

IN CT / FEEDBACK SELECTION
This instrument can use the "IN CT" input or the "Feedback" input; the two inputs are not contemporarily.
The current transformer input allows you to measure and display the current running in a load driven by a time proportional control output during the ON and OFF periods of the output cycle time. By this feature it is also available the "Out failure detection" function (see page 111).
The feedback input is used when the servomotor close loop or the servomotor open loop with valve position indication outputs is required.

To select the desired input type, set V301 (see fig. 20) as detailed in the following table:

Input	V301.1	V301.2	V301.3	V301.4
IN CT	ON	OFF	ON	ON
Feedback	OFF	ON	OFF	ON

OPTION CHECK

This instrument can be supplied with several options.
Two integrated circuits (KY101 and KY103), located as shown in fig. 22 and inserted in a socket, give you the possibility to verify if your instrument is equipped with the desired option.
When KY101 is present the auxiliary input and the digital inputs are present.
When KY103 is present the auxiliary power supply option is present.

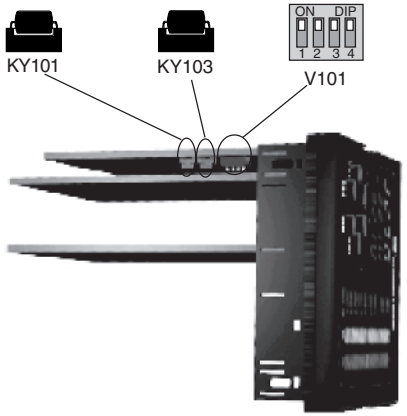

Fig. 22

Operative mode and Hardware lock

By V101 (see fig 22) it is possible to select one of the following operative modes:

a) run time mode without configuration mode
b) run time and configuration modes
c) security code setting mode

Set V101 according to the following table:

Modes	V101.1	V101.2	V101.3	V101.4
a	OFF	ON	ON	ON
b	OFF	ON	OFF	ON
c	OFF	ON	OFF	OFF

All the others switch combinations are reserved.

SECURITY CODE SETTING MODE

General notes

The instrument parameters are divided in two families and each family is divided in groups.

- The first family encompasses all the run time parameters.
- The second family comprises all the configuration parameters.

A specific security code enables the parameter modification of each family.

For run time parameters, it is possible to select which groups of them will be protected by the security code and in this case, it is necessary to set the run time security code before to modify one or more parameters of a protected group.

The configuration security code protects all configuration parameters and it will be necessary to set the configuration security code before to start the configuration parameters modification.

For configuration parameters an hardware lock is also available.

Security code setting:

1) Remove the instrument from its case.
2) Set the internal dip switch V101 as follows:
   - V101.1 = OFF- V101.2 = ON
   - V101.3 = OFF- V101.4 = OFF
3) Re-insert the instrument.
4) Switch on the instrument. The display will show:

   The upper display shows that the security code setting mode is selected while the lower display shows the firmware version.
5) Push the FUNC pushbutton.

Run time security code

The display will show:

Note: the middle display shows the current status of the run time security code ("0", "1" or "On").

By ▲ and ▼ push-button, set "S.run" parameter as follows:

0	No protection (it is ever possible to modify all run time parameters);
1	ever protected (it is never possible to modify a run time parameter);

from 2 to 250 security code for run time parameter protection.

NOTES:

1) The selected value of a security code cannot be displayed anymore and, coming back to the "S.run" parameter, the display will show :
   - "On" when "S.run" is different from 0 or 1
   - "0" when "S.run" is equal to 0
   - "1" when "S.run" is equal to 1.

   When the security code is forgotten, a new value can be set.
2) When "S.run" is different from 0 or 1, the "run time default " and the "run time hidden" groups are ever protected by security code.

Run time groups protected by security code
The display will show:

Scrt
YES
Gr2

By this parameter it is possible to set if the run time group 2 will be protected or not by the run time security code.
By ▲ and ▼ push-button, set "Gr2" parameter as follows:

- nO No protection (it is always possible to modify run time group 2 parameters)
- Yes the run time group 1 parameter modification will be protected by security code.

Push the FUNC push-button; the instrument memorizes the new setting and goes to the next parameter.

NOTES:1) This selection may be carried out only if a run time security code has been set (from 2 to 250).
2) The above described selection may be repeated for all groups of the run time mode.

Configuration security code
The display will show:

Scrt
KEY
S.CnF

Note: the middle display shows the current status of the configuration security code ("0", "1" or "On").
By ▲ and ▼ push-button, set "S.CnF" parameter as follows:

- 0 No protection (it is ever possible to modify all configuration parameters);
- 1 ever protected (it is never possible to modify a configuration parameter);
- from 2 to 250 security code for configuration parameter protection.

NOTE: the selected value of a security code cannot be displayed anymore and, coming back on the "S.CnF" parameter, the display will show "On" when "S.CnF" is different from 0 or 1, "0" when "S.CnF" is equal to 0, "1" when "S.CnF" is equal to 1.
When the security code is forgotten, a new value can be set.

NOTE: at the end of the security code setting procedure, set V101 according to the desired operative mode (see "Operative mode and hardware lock" paragraph).

RUN TIME AND CONFIGURATION MODES

The hardware selection described in "Operative mode and hardware lock" paragraph allows you to start one of the following operative modes:
- configuration mode.
- run time mode
  The run time mode can be divided as follows:
  - Run time mode as controller
  - Run time mode as programmer

At power up, the instrument starts in the same mode (configuration or run time) it was prior to the power OFF.

General note about graphic symbols used for mnemonic code visualization.
The instrument displays some characters with special symbols. The following table shows the correspondence between the symbols and the characters

symbol	character	symbol	character
"k"	k	"W"	W
"m"	m	"Z"	Z
"V"	V	"J"	J

Keyboard description

MENU = is used to select a parameter group

FUNC = ❑ when the instrument is in "normal display mode" it changes the indication on the lower display (see "display function").

❑ During parameter modification, it allows you to memorize the new value of the selected parameter and go to the next parameter (increasing order).

MAN = ❑ when the instrument is in "normal display mode", pushing MAN push-button for more than 1 s, it is possible to enable or disable the manual function.

❑ During parameter modification, it allows you to scroll back the parameters and groups without memorizing the new setting.

▲ = ❑ During parameter modification, it allows you to increase the value of the selected parameter

❑ During MANUAL mode, it allows you to increase the output value.

❑ During program execution with the instrument in HOLD status, it allows you to shift forward the program with a speed 60 time faster than normal.

▼ = ❑ During parameter modification, it allows you to decrease the value of the selected parameter

❑ During MANUAL mode, it allows to decrease the output value.

❑ During program execution with the instrument in HOLD status, it allows you to shift backward the program with a speed 60 time faster than normal.

RUN = allows:
- to rapidly select the program to execute.
- to start program execution,
- to toggle from RUN to HOLD mode or viceversa (pushing for more than 3 s and less than 10 s) or
- to ABORT program execution (pushing for more than 10 s).

RUN + ▲= during program editing are used to add a program segment (see paragraph "How to edit a program")

RUN + ▼= during program editing are used to delete a program segment (see paragraph "How to edit a program")

RUN + MENU = during program editing are used to jump to the first parameter of the next segment (see paragraph "How to edit a program")

RUN + MAN = during program editing are used to check the selected program (see paragraph "How to check a program")

▼+MENU= are used to start the lamp test function (see paragraph "Lamp test")

▲+FUNC or ▼+FUNC
During parameter modification they allow you to increase/decrease the value under modification with higher rate.

▲+MAN or ▼+MAN
- ❑ During parameter modification they allow you to jump to the max or min programmable value.
- ❑ When the instrument operates as programmer in HOLD mode, they allow to jump to the beginning of the next segment or to the end of the previous one.

NOTES:
1) All the actions explained above which require the pressure of two or more push-buttons must follow exactly the push-button sequence shown.
2) A 10 or 30 seconds time out (see "t.out" [C.I10]) can be selected for parameter modification during run time mode. If, during parameter modification, no push-button is depressed for more than 10 (30) seconds, the instrument goes automatically to the “normal display mode” and the eventual modification of the last parameter will be lost.

CONFIGURATION MODE

Switch on the instrument.
The instrument will start in the same way it was prior to the power down (configuration mode or run time mode)

If the instrument starts in configuration mode, push the MENU pushbutton and go to the "Configuration group 1" (see page 31).
If the instrument starts in run time mode, by keeping depressed the MENU push-button for more than 5 seconds the instrument will show:

NOTES:
1) The upper display shows the selected parameter family.
2) The middle display shows the selected action.
3) The lower display shows the firmware version.
4) If no push-button is depressed for more than 10 s (or 30 s according to "CnF.6" "t.out" [time out selection" C.I10] parameter setting), the instrument returns automatically to the normal display mode.

By ▲ or ▼ push-button it is possible to select between:

nonE. = (monitor) this selection allows you to monitor but not to modify the value assigned to the configuration parameters

nodF.= (modify) this selection allows you to monitor and to modify the value assigned to the configuration parameters.

NOTES:

1) During monitor mode, the instrument continues to operate as in run time mode.
2) When modify mode is started, the instrument stops the control and:
   - sets to OFF the control outputs;
   - turns to OFF the bargraph displays (25Q only);
   - sets analog retransmissions to the retransmitted initial scale value;
   - sets alarms in no alarm condition;
   - sets to OFF the events;
   - disables the serial link;
   - the time out will be removed.
3) When the modify mode is disabled by V101 (V101.3), the ▲ or ▼ push-button pressure has no effect.

MONITOR MODE

During the run time mode, it is possible to monitor but not modify all configuration parameters.

When it is desired to verify the instrument configuration, proceed as follows:

1) Push the MENU push-button for more than 5 seconds: the display will show:

   CONF
   nonE.
   A.00

2) Push the MENU push-button the display will show:

   CnF. 1

   InPt.

   it shows that configuration group 1 is selected and it encompasses all the input parameters.

The configuration parameter "Monitor mode" follows the "Modify mode" sequence.

NOTES:

1) During monitor mode, the instrument continues to operate as in run time mode.

2) During monitor mode, if no push-button is depressed for more than 10 s (or 30 s according to "t.out" [C.I10] parameter setting), the instrument returns automatically to the normal display mode.

MODIFY MODE

1) By ▲ or ▼ push-button select the modify mode.
2) Push the MENU push-button.
   If a security code is applied to the configuration parameter, the instrument will show:

   CONF
   KEY
   SCrt

3) By ▲ and ▼ push-button set a value equal to the security code assigned to the configuration mode (see "Configuration security code " at page 25).
   If the code is different from the security code, the instrument automatically returns to the first configuration display otherwise the display will show:

   CONF
   OFF
   dFLt.

   The modify mode is started.
   This display allows you to load the default configuration parameter.
   For more details see chapter "Default parameter" (see Appendix A).
4) By ▲ or ▼ push-button select the OFF indication and push the MENU push-button.
   The display will show:

   CnF. 1

   InPt.

   This is the starting display of the first group of configuration parameters.

NOTES:

1) In the following pages we will describe all the parameters. The instrument, however, will show only the parameters related to the specific hardware and in accordance with the

specific instrument configuration (i.e. setting OUT 3 different from servo, all the parameters related to servomotor output will be skipped).

2) During configuration parameters modify mode, the upper display shows the selected parameter group, the lower display shows the mnemonic code of the selected parameter while the central display shows the value or status assigned to the selected parameter.
3) For an easy consultation of this manual, a sheet named "Reference parameter guide" with all the parameter visualizations is enclosed.
   The group (column) of configuration parameters are identified by the "C" letter followed by A, b, etc.
   The "code" formed by the column and row (example [C.d03]) is reported, in the user manual, before each parameter description and allows you to quickly find out the respective parameter.

When it is desired to exit from configuration modify mode proceed as follows:

a) Push "MENU" push-button until the "Configuration group END is displayed.
b) Pushing "▲" or "▼" push-button select the "YES" indication.
c) Push "MENU" push-button. The instrument terminates the configuration modify mode, it preforms an automatic reset and restarts in the run time mode.

CONFIGURATION GROUP 1 [C.dxx]

MAIN AND AUXILIARY INPUT CONFIGURATION

CnF. 1

InPt.

Push the FUNC push-button

LnFr - Line frequency - [C.d01]

Range: 50 Hz
60 Hz

In. Int - Main input type and range - [C.d02]

Ranges:

*	1 = TC	L	From	-100	to	900	°C
*	2 = TC	J	From	-100	to	1000	°C
*	3 = TC	K	From	-100	to	1370	°C
*	4 = TC	T	From	-200	to	400	°C
*	5 = TC	U	From	-200	to	600	°C
*	6 = TC	E	From	-100	to	800	°C
	7 = TC	N	From	-100	to	1400	°C

8 = TC	S	From	- 50	to	1760	°C
9 = TC	R	From	- 50	to	1760	°C
10 = TC	B	From	0	to	1820	°C
11 = TC	G (or W)	From	0	to	2300	°C
12 = TC	D (or W3)	From	0	to	2300	°C
13 = TC	C (or W5)	From	0	to	2300	°C
14 = TC	Ni-Ni18%Mo	From	0	to	1100	°C
* 15 = RTD	Pt100	From	-200	to	850	°C
16 = TC	L	From	-150	to	1650	°F
17 = TC	J	From	-150	to	1830	°F
18 = TC	K	From	-150	to	2500	°F
19 = TC	T	From	-330	to	750	°F
20 = TC	U	From	-330	to	1110	°F
21 = TC	E	From	-150	to	1470	°F
22 = TC	N	From	-150	to	2550	°F
23 = TC	S	From	- 60	to	3200	°F
24 = TC	R	From	- 60	to	3200	°F
25 = TC	B	From	32	to	3300	°F
26 = TC	G (or W)	From	0	to	4170	°F
27 = TC	D (or W3)	From	0	to	4170	°F
28 = TC	C (or W5)	From	0	to	4170	°F
29 = TC	Ni-Ni18%Mo	From	0	to	2000	°F
* 30 = RTD	Pt100	From	-330	to	1560	°F
31 = Linear		From	0	to	20	mA
32 = Linear		From	4	to	20	mA
33 = Linear		From	0	to	5	V
34 = Linear		From	1	to	5	V
35 = Linear		From	0	to	10	V
36 = Linear		From	2	to	10	V
37 = Linear		From	0	to	60	mV
38 = Linear		From	12	to	60	mV

* For these ranges it is possible to select a read-out with one decimal figure but the instrument could not display a measure lower than -199.9 or higher than 999.9 and the input range will be limited by it.

NOTES:

1) When a linear input is selected, the instrument automatically sets the "readout initial scale value" [C.d05] equal to 0 and the "readout full scale value" [C.d06] equal to 4000
2) When input type has been changed, the instrument automatically forces:
   - the "ñ.In.L" [C.d05], "SS.th" [C.I09] and "brG.L" [C.I03] parameters to the new initial scale value,
   - the "ñ.In.H" [C.d06] and "brG.H" [C.I04] parameter to the new full scale value and
   - the "ñ.In.d" [C.d03] parameter to "no decimal figure".

ñ.In.d - Decimal point position - [C.d03]

Ranges: ----. = no decimal figure
---.- = one decimal figure
--.-- = two decimal figures
-.--- = three decimal figures

NOTES:
1) For main input type 1 to 6, 15 and 30 only the "no decimal figure" and "one decimal figure" are selectable, the input range is limited within -199.9 and 999.9 and it acts as an input type changement.
2) For main input type 7 to 14 and 16 to 29 this parameter is not available.
3) For linear input types (from 31 to 38) all positions are available.

ñ.In.S - Square root extraction for main input - [C.d04]

Ranges: dIS = square root extraction disabled
Enb = square root extraction enabled

NOTES:
1) This parameter is available only for main input type 31 to 38.
2) When the square root extraction is enabled the values of the following parameters:
- "ñ.In.L" (read-out - initial scale value [C.d05]),
- "ñ.In.H" (read-out - full scale value [C.d06]),
- "brG.L" (bargraph - initial scale value [C.I03]),
- "brG.H" (bargraph - full scale value [C.I04])
- "SS.th" (threshold to enable the soft start [C.I09])

must be positive or equal to zero.
Enabling the square root extraction the instrument verifies the current value of the "ñ.In.L", "ñ.In.H", "brG.L", "brG.H" and "SS.th" parameters and force to zero the eventual negative values.

ñ.In.L - Read-out- initial scale value - [C.d05]

Ranges: - from -1999 to 9999 for linear input (Input range 31 to 38),
- from 0 to 9999 for linear input with square root extraction,
- from initial range value to "ñ.In.H" (read-out- full scale value C.d06]) for TC/RTD input

NOTES:
1) The Read-out initial scale value can be higher than the Read-out - full scale value.

2) Changing the value of this parameter, the "brG.L" (bargraph - initial scale value [C.I03]) and "rL" (set point low limit [r.E12]) parameters will be realigned to it.
   If a linear input is selected, also the “SS.th” (threshold for soft start [C.I09]) will be realigned to it.

ñ.In.H - Read-out- full scale value - [C.d06]

Ranges: - from -1999 to 9999 for linear input (Input range 31 to 38),
- from 0 to 9999 for linear input with square root extraction,
- from "ñ.In.L" (read-out- initial scale value [C.d05]) to full range value for TC/RTD input.

NOTES:
1) Changing the value of this parameter, the "brG.H" (bargraph - full scale value [C.I04]) and "rH" (set point high limit [r.E13]) parameters will be realigned to it.
2) The programmed input span, in absolute value, must be greater than:
   300 °C or 550 °F for TC inputs
   100°C or 200 °F for RTD inputs
   100 digits for linear inputs.

OFSt - Offset on the main input - [C.d07]

Ranges: from -500 to 500.
NOTE: the decimal point will be automatically positioned as selected for the main input.

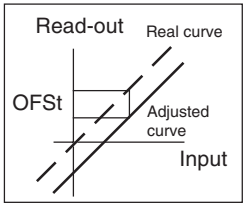

dSFL - Filter on the displayed value - [C.d08]

Ranges: from 0 (no filter) to 8 seconds.
NOTE: this is a first order digital filter applied to the read-out of the main input.

A. In.F - Auxiliary input function - [C.d09]

Range: nonE = Input not used
bIAS = Input used as bias for local set point

NOTES:

1) When auxiliary input option is not mounted the middle display will show “no.Pr” (not present).
2) When "bIAS" is selected, the instrument adds to the local set point the value measured by the auxiliary input and scaled by "A.In.L" [C.d11] and "A.In.H" [C.d12] parameters.

A. In.t - Auxiliary input type - [C.d10]

This parameter will be skipped when the auxiliary input option is not mounted or "A.In.F" (auxiliary input function [C.d09]) is equal to "nonE".

Range:
0-20 = 0–20 mA
4-20 = 4–20 mA
0- 5 = 0– 5 V
1- 5 = 1– 5 V
0-10 = 0–10 V
2-10 = 2–10 V

A. In.L - Initial scale read-out of the auxiliary input - [C.d11]

This parameter is available only when auxiliary input is configured

Range: from -1999 to 9999

NOTE: the decimal point will be automatically positioned as selected for the main input.

A. In.H - Full scale read-out of the auxiliary input - [C.d12]

This parameter is available only when auxiliary input is configured.

Range: from -1999 to 9999

NOTE: the decimal point will be automatically positioned as selected for the main input.

A. 1.FL - Filter on auxiliary input - [C.d13]

This parameter is available only when auxiliary input is configured
Ranges: from 0 (no filter) to 8 seconds.
NOTE: this is a first order digital filter applied to the measured value made by the auxiliary input.

General note about configuration group 1
Exiting from the configuration group 1 the instrument automatically verifies the programmed span for the linear input.
If it is wrong, the device will show:

CnF. 1
Err
InPt

Push the FUNC pushbutton more times until the "ñ.In.L" [C.d05] or "ñ.In.H" [C.d06] are displayed and modify their value in order to respect the minimum read-out span (see NOTE 2 of the "ñ.In.H" [C.d06] parameter).

CONFIGURATION GROUP 2 [C.Exx]
OUTPUTS CONFIGURATION

CnF.2

OUt.

O 1.Fn - OUT 1 function - [C.E01]

Range: nonE = Output not used
ñAin = Time proportional main control output
SECn = Time proportional secondary control output
ALr.1 = Alarm 1 output
Eun.1 = Event 1 output
NOTE: for Event description see "Event 1 function" [C.H.09] parameter.

02.Fn - OUT 2 function - [C.E02]

Range: nonE = Output not used
ñAin = Time proportional main control output
SECn = Time proportional secondary control output
ALr.2 = Alarm 2 output
Eun.2 = Event 2 output

03.Fn - OUT 3 function - [C.E03]

When the option is not mounted the middle display will show “no.Pr” (not present).

Range: nonE = Output not used
ñAin = Time proportional main control output
SECn = Time proportional secondary control output
ALr.3 = Alarm 3 output
Eun.3 = Event 3 output
ñC.Sñ = Servomotor control drive as main control output
SC.Sñ = Servomotor control drive as secondary control output

04.Fn - OUT 4 function - [C.E04]

Range: nonE = Output not used
ñAin = Time proportional main control output
SECn = Time proportional secondary control output
ALr.4 = Alarm 4 output
Eun.4 = Event 4 output

NOTES:

1) When option is not mounted the middle display will show “no.Pr” (not present).
2) When servomotor control drive is hardware selected (see "Output 3 and 4 selection" at pag. 21), the OUT 4 can be used only as servomotor drive and this parameter will not be shown.

Sn.tP - Servomotor type - [C.E05]

This parameter will be available only when servomotor control drive is configured (“CnF.2 - O3.Fn” [C.E03]= “ñC.Sñ” or “SC.Sñ”).

Range: CLSd = Close loop type
NOTE: this selection is available only if feedback circuitry is mounted and selected.
OPEn = Open loop type.

FEEd - Valve position indication - [C.E06]

This parameter will be displayed only when open loop servomotor control drive output is configured.

Range: Fb = The valve position is measured and displayed
no.Fb = The valve position is not measured

NOTE: If the feedback option is not mounted, this parameter will be forced to “no.Fb” (no feedback).

O5.Fn - OUT 5 function - [C.E07]

Range: nonE = Output not used
ñAin = Main control output (linear)
SECn = Secondary control output (linear)
PV.rt = Process variable retransmission
SP.rt = Operative set point retransmission

NOTE: When the option circuitry is not mounted the middle display will show “no.Pr” (not present).

O5.rn - OUT 5 range - [C.E08]

This parameter will be available only when Out 5 is configured ("O5.Fn" [C.E07] different from "nonE")

Range: 0-20 = 0÷20 mA
4-20 = 4÷20 mA

O5.Lr - OUT 5 retransmission initial scale value - [C.E09]

This parameter will be available only when Out 5 function [C.E07] is configured as “PV.rt” or “SP.rt”

Range: From -1999 to 9999

NOTES:

1) Decimal point is positioned as previously selected at “CnF.1 - ñ.In.d” [C.d03])
2) The OUT 5 retransmission initial scale value can be higher than OUT 5 retransmission full scale value [C.E.10].

O5.Hr - OUT 5 retransmission full scale value - [C.E10]

This parameter will be available only when Out 5 function [C.E07] is configured as “PV.rt” or “SP.rt”
Range: From -1999 to 9999
NOTE: Decimal point is positioned as previously selected at “CnF.1 - ñ.In.d” [C.d03])

O5.FL. - OUT 5 filter on the retransmitted value - [C.E11]

This parameter will be available only when OUT 5 is configured as process variable retransmission ("O5.Fn" [C.E07] is equal to “PV.rt”).
Range: From 0 (no filter) to 8 seconds
NOTE: this is a first order digital filter applied to the retransmitted output value.

O6.Fn - OUT 6 function - [C.E12]

Range: nonE = Output not used
ñAin = Main control output (linear)
SECn = Secondary control output (linear)
PV.rt = Process variable retransmission
SP.rt = Operative set point retransmission

NOTE: When the option circuitry is not mounted the middle display will show “no.Pr” (not present).

O6.rn - OUT 6 range - [C.E13]

This parameter will be available only when Out 6 is configured ("O6.Fn" [C.E12] different from "nonE")
Range: 0-20 = 0÷20 mA
4-20 = 4÷20 mA

O6.Lr - OUT 6 retransmission initial scale value - [C.E14]

This parameter will be available only when Out 6 function [C.E12] is configured as “PV.rt” or “SP.rt”
Range: From -1999 to 9999
NOTES:
1) Decimal point is positioned as previously selected at “CnF.1 - ñ.In.d” [C.d03])
2) The OUT 6 retransmission initial scale value can be higher than OUT 6 retransmission full scale value [C.E.15].

O6.Hr - OUT 6 retransmission full scale value - [C.E15]

This parameter will be available only when Out 6 function [C.E12] is configured as “PV.rt” or “SP.rt”
Range: From -1999 to 9999
NOTE: Decimal point is positioned as previously selected at “CnF.1 - ñ.In.d” [C.d03])

O6.FL - OUT 6 filter on the retransmitted value - [C.E16]

This parameter will be available only when OUT 6 is configured as process variable retransmission ("O6.Fn" [C.E12] is equal to “PV.rt”).
Range: From 0 (no filter) to 8 seconds
NOTE: this is a first order digital filter applied to the retransmitted output value.

General note about configuration group 2

I) Exiting from the configuration group 2 the instrument automatically verifies the congruence of all parameters. If a wrong setting is detected, the device will show:

CnF.2
Err
OUt.

Pushing the FUNC pushbutton, verify (and modify if necessary) all group 2 parameter settings in order to assure that the following conditions are respected:

a) Only one of the 6 outputs is configured as main output (“ñAin”)
b) Only one of the 6 outputs is configured as secondary output (“SECn”)
c) If only one control output is configured, it should be the main control output (“ñAin”)
d) The servomotor must be “close loop” type if it is one of two control outputs.

NOTE: The instrument may be used as an indicator, so that this test is satisfied even if no output is configured as control output

II) Exiting from the configuration group 2 also the following actions are automatically performed:

A) The "Añ.UL" parameter ("Output value for auto to manual transfer" [C.G04]) will be forced to "bumpless" ("buñ") if:
1) its value is < 0 and only one control output is configured;
2) servomotor open loop is configured.

B) The "SF.Cn" parameter ("Condition for output safety value" [C.G09]) will be forced to "standard" ("Std.") if it is not complied with configured control output type.

C) The "SF.UL" parameter ("Output safety value" [C.G10]) will be forced to 0 if only one control output is configured and its value is < 0.

D) The "Fd.Fn" parameter ("Out failure detection current measurement" [C.I11]) will be forced to "nonE" if it is assigned to a control output different from a time proportional output.

E) The "Fd.Ou" parameter ("Out failure detection output assignment" [C.I13]) will be forced to "nonE" if it is assigned to an output configured as control output.

F) The "IP" parameter ("Integral pre-load" [r.d05]) will be forced to 50.0 if only one control output is configured and its value is < 0.

CONFIGURATION GROUP 3 [C.Fxx]
CONTROL OUTPUT CONFIGURATION

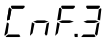

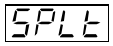

- Split range - [C.F01]

This parameter will be available only when two control outputs are configured.

Range: dIS = Split range feature is not required
Enb = Split range feature is required

NOTE about the split range.
This function allows you to drive by the same control action, two physical outputs (two actuators) with different bias and gain.
The relation between the Calculated Power Output and the

resulting real outputs are shown below:

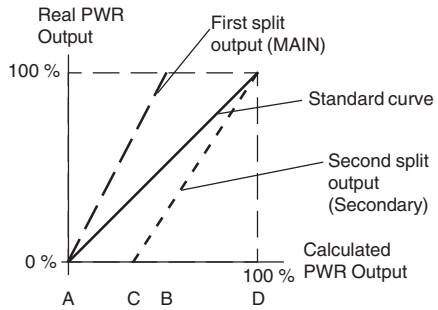

where:
- for the first split output (MAIN)
  Bias 1 = -A
  Gain 1 = 100 / (B - A)
- For the second split output (SECONDARY)
  Bias 2 = -C
  Gain 2 = 100 / (D - C)

FOR EXAMPLE:
Let's suppose that the first split output operates from 0 % to 33.3 % of the calculated output while the second one operates from 33.3 % to the 100 % of the calculated output.

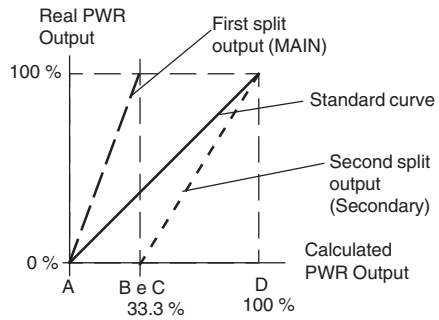

Where: A = 0 %
B = C = 33.3 %
D = 100 %

We will set:
Bias 1 = 0
Gain 1 = 100 / (33.3 - 0) = 3
Bias 2 = - 33.3
Gain 2 = 100 / (100 - 33.3) = 1,5

The bias and gain of the two split outputs are the following:
“ñC.bS” [C.F03] is the Bias 1 applied to the main output
“ñC.Gn” [C.F02] is the Gain 1 applied to the main output
“SC.bS” [C.F05] is the Bias 2 applied to the secondary output
“SC.Gn” [C.F04] is the Gain 2 applied to the secondary output

ñC.Gn - Main control output gain - [C.F02]

This parameter will be available only when the split range is enabled ("SPLt." [C.F01] = "Enb").
Range: from 0.50 to 5.00.

ñC.bS - Main control output bias - [C.F03]

This parameter will be available only when the split range is enabled ("SPLt." [C.F01] = "Enb").
Range: from -100.0 to 100.0 % of the output span.

SC.Gn - Secondary control output gain - [C.F04]

This parameter will be available only when the split range is enabled ("SPLt." [C.F01] = "Enb").
Range: from 0.50 to 5.00

SC.bS - Secondary control output bias - [C.F05]

This parameter will be available only when the split range is enabled ("SPLt." [C.F01] = "Enb").
Range: from -100.0 to 100.0 % of the output span.

nCCn - Main control output conditioning - [C.F06]

This parameter will be available only when main control output is configured.

Range: norñ = The control output is calculated by the PID.
CñPL = The control output is complemented (100-PID calculated value).
Ouic = The control output is conditioned to match a "QUICK OPENING" flow characteristic.
Eou = The control output is conditioned to match an "EQUAL PERCENTAGE" flow characteristic.

NOTE about output conditioning

Sometimes non linear valves are used where a linear valve is suitable.
In these cases, it is advisable to linearize the ratio between flow rate and valve travel in order to obtain a better control of the process.
This instrument allows you to select an output linearization in accordance with the two most common valve flow characteristics:
- Quick opening
- Equal percentage.

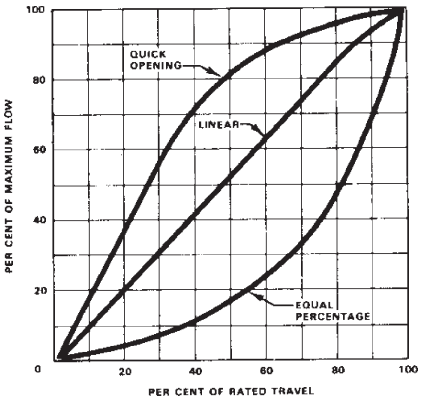

ñ.SCL - Main control output in engineering unit - [C.F07]

This parameter will be available only when main control output is configured.

Range: nO = Scalable is not required
YES = Scalable is required

NOTE: This scaling allows you to display the output value in engineering units instead of in percent.

ñC.dP - Main output decimal point position - [C.F08]

This parameter will be available only when "ñ.SCL" ("Main control output in engineering units" [C.F07]) is set to "YES".

Range: ----. = No decimal figure
---.- = One decimal figure.
--.-- = Two decimal figures.

ñC.EL - Main output initial scale readout - [C.F09]

This parameter will be available only when "ñ.SCL" ("Main control output in engineering units" [C.F07]) is set to "YES".

Range: from -199 to 999

NOTE: The Main output initial scale value can be higher than the Main output full scale value.

ñC.EH - Main output full scale readout - [C.F10]

This parameter will be available only when "ñ.SCL" ("Main control output in engineering units" [C.F07]) is set to "YES".

Range: from -199 to 999

nC.AC - Main output auxiliary conditioning - [C.F11]

This parameter will be available only when main control output is configured and “ñC.Cn” ("Main control output conditioning" [C.F06]) is different from “norñ”.

Range: bEFr = The functions listed at Note (*) are calculated **before** to apply the action selected by “ñC.Cn” ("Main control output conditioning" [C.F06]) parameter.

AFtr = The functions listed at Note (*) are calculated **after** to apply the action selected by “ñC.Cn” (“Main control output conditioning” [C.F06]) parameter.

Note (*)

- "Main control output limiters" - for more details see [r.E04] and [r.E05] parameters.
- "Main control output max rate of rise" (see [r.E06]).
- "Control output display value" - for more details see "Display function during programmer mode" paragraph at pag. 106 and [C.F07], [C.F08], [C.F09] and [C.F10] parameters.
- "Threshold for alarm on control output value" - for more details see [r.F01], [r.F05] [r.F09] and [r.F13] parameters.
- The control output value displayed by bargraph.

SC.Cn - Secondary control output conditioning - [C.F12]

This parameter will be available only when secondary control output is configured.

Range: norñ = The control output is calculated by the PID

CñPL = The control output is complemented (100-PID calculated value)

Ouic = The control output is conditioned to match a “QUICK OPENING” flow characteristic

Eou = The control output is conditioned to match an “EQUAL PERCENTAGE” flow characteristic

For more details see also **NOTE about output conditioning** at page 44.

S.SCL - Secondary control output in engineering unit - [C.F13]

This parameter will be available only when secondary control output is configured.

Range: nO = Scalable is not required
YES = Scalable is required

NOTE: This scaling allows to display the output value in engineering units instead of in percent.

SC.dP - Secondary control output decimal point position - [C.F14]

This parameter will be available only when "S.SCL" ("Secondary control output in engineering units" [C.F13]) is set to "YES".

Range: ----. = No decimal figure
---.- = One decimal figure.
--.-- = Two decimal figures.

SCEL - Secondary control output initial scale value - [C.F15]

This parameter will be available only when "S.SCL" ("Secondary control output in engineering units" [C.F13]) is set to "YES".

Range: from -199 to 999

NOTE: The secondary control output initial scale value can be higher than the secondary control output full scale value.

SCEH - Secondary control output full scale value - [C.F16]

This parameter will be available only when "S.SCL" ("Secondary control output in engineering units" [C.F13]) is set to "YES".

Range: From -199 to 999

SC.AC - Secondary output auxiliary conditioning - [C.F17]

This parameter will be available only when secondary control output is configured and “SC.Cn” ("Secondary control output conditioning" [C.F12]) is different from “norñ”.

Range: bEFr = The functions listed at Note (**) are calculated **before** to apply the action selected by “SC.Cn” ("Secondary control output conditioning" [C.F12]) parameter.

AFtr = The functions listed at Note (**) are calculated **after** to apply the action selected by “SC.Cn” (“Secondary control output conditioning” [C.F12]) parameter.

Note (**)

- "Secondary control output limiters" - for more details see [r.E08] and [r.E09] parameters.
- "Secondary control output max rate of rise" (see [r.E10]).
- "Secondary control output display value" - for more details see "Display function during programmer mode" paragraph at pag. 106 and [C.F13], [C.F14], [C.F15] and [C.F16] parameters.
- "Threshold for alarm on control output value" - for more details see [r.F01], [r.F05] [r.F09] and [r.F13] parameters.
- The secondary control output value displayed by bargraph.

General note about configuration group 3

Exiting from the configuration group 3 the instrument automatically tests the "SPLt" parameter (Split range [C.F01]). When "SPLt." parameter is enabled (= "Enb"), the instrument performs the following actions:

1) If “Añ.UL” parameter ("Output value for AUTO to MAN transfer [C.G04]) is lower than 0, it will be forced to “buñ“.
2) If the “SF.UL” parameter ("Output safety value" [C.G10]) is lower than zero, it will be forced to zero.
3) If the “IP” parameter ("Integral pre-load" [r.d05] is lower than zero, it will be forced to 50.0.

CONFIGURATION GROUP 4 [C.Gxx]
AUXILIARY CONTROL CONFIGURATION

CnF.4

AC.Cn

SmFn - Smart function - [C.G01]

This parameter will be available only when at least one control output is configured.
Range: dIS = Smart function disabled.
Enb = Smart function may be enabled.

Cn.tP - Control action type - [C.G02]

This parameter will be available only when at least one control output is configured.
Upper display: CnF.4
Lower display: Cn.tP
Range: Pid = The process is controlled by PID actions.
Pi = The process is controlled by PI actions.

ñAn.F - Manual function - [C.G03]

This parameter will be available only when at least one control output is configured.
Range: dIS = Manual function disabled.
Enb = Manual function may be enabled.

AnUL - Output value for AUTO to MAN transfer - [C.G04]

This parameter will be available only when at least one control output is configured and manual function is enabled (“ñAn.F” [C.G03] = “Enb”).
Range: - from 0.0 % to 100.0 % of the output span if device is configured with one control output only;
- from -100.0 % to 100.0 % of the output span if device is configured with two control outputs (split range excluded).
Above the value 100.0 the display shows “buñ.” meaning that the transfer from AUTO to MANUAL is bumpless (the instrument sets for MANUAL mode the same power output used in AUTO mode).

NOTES:
1) When open loop servomotor control drive without valve position indication is configured, this parameter is forced to “buñ.” and it cannot be modified.
2) When open loop servomotor control drive with valve position indication is configured and the transfer from AUTO to MAN is required, the instrument is able to reach the value programmed by this parameter using temporarily the valve position value as a feedback.

ñA.bt - MANUAL to AUTO transfer type - [C.G05]

This parameter will be available only when at least one control output is configured and manual function is enabled (“ñAn.F” [C.G03] = “Enb”)

Range: buñ. = Bumpless balance transfer.
buñ.b = Bumpless balanceless transfer (the operative set point is aligned to the measure value).

NOTES:
1) The “alignment” is not performed if measure is in error condition or Remote Set point is selected.
2) The selected local set point will be changed even if it is software protected.

General note about the instrument restarting

The two following parameters are used to set the instrument restarting after a power down:
- the St.Pr [C.G07] parameter setting is used to the instrument restart when a program was running.
- the St.Fn [C.G06] parameter setting is used to all the other cases.

St.Fn - Device status at start up when it works as controller - [C.G06]

This parameter will be available only when at least one control output is configured and manual function is enabled (“ñAn.F” [C.G03] = “Enb”).

Range: Auto = It starts always in auto mode
ñan = It starts always in manual mode with power output set to 0.
Cnd.A = It starts in the same way it was left prior to power shut down (if in manual mode the power output is set to 0).
Cnd.b = It starts in the same way it was left prior to power shut down (if in manual mode the power output will be equal to the last value prior to power shut down).

St.Pr - Program restarting after a power failure - [C.G07]

Range: Edit = the program execution will be stopped and the instrument starts in STAND-BY mode with the values programmed by [r.A13] to [r.A17] for the specific program.

SAñE = the program starts from the point in execution left prior to power shut down.

Src = at power up, the instrument operates as follows

A) if the measured value is inner to the program restart tracking band ("St.tk" [C.G08]) and the instrument was performing a soak, the intrument verifies the tracking band selected for the specific segment and:

A.1) if the measured value is inner to the specific tracking band, the program starts from the point in execution left prior to power shut down.

A.2) if the measured value is outer to the specific tracking band, the program will operate as described at point B).

B) if the measured value is inner to the program restart tracking band ("St.tk" [C.G08]), and the instrument was performing a ramp, it will start to search, in the part of the program already executed, the first set point equal to the current measured value and

B.1) if this point has been found, the program execution restart from it.

B.2) if this point has not been found, the program execution will be stopped and the instrument starts in STAND-BY mode with the values programmed by the parameters from "At the end of program x reset the break event" [r.A13] to "PID group at the end of program x" [r.A17] for the specific program.

C) if the current measured value is outer to the program restart tracking band ("St.tk" [C.G08]), the program execution will be stopped and the instrument starts in STAND-BY mode with the values programmed by the parameters from "At the end of program x reset the break event" [r.A13] to "PID group at the end of program x" [r.A17] for the specific program.

NOTE: When during a program execution, a power failure occurs, at power up the instrument displays this situation showing on the upper display "E.600" indication.
Push one pusbutton to delete the "E.600" indication.

St.tA - Program restart tracking band - [C.G08]

This parameter will be available only when "St.Pr" (program restart after power supply failure [C.G07]) is equal to “Src”.
Range: from 0 to 500 digits.

SF.Cn - Condition for output safety value - [C.G09]

This parameter will be available only when at least one control output is configured.
Ranges:
- When no output is configured as open loop servomotor control, "SF.Cn" can be set as follows:
  - Std. = No safety value (“standard setting” see chapter ERROR MESSAGES).
  - Ov.Un = Safety value applied when the instrument detects an overrange or underrange condition of the main input.
  - OvEr = Safety value applied when the instrument detects an overrange condition of the main input.
  - Undr = Safety value applied when the instrument detects an underrange condition of the main input.
- When the open loop servomotor control is configured, "SF.Cn" can be set as follows:
  - Std. = No safety value (“standard setting” see chapter ERROR MESSAGES).
  - Cnd.A = When the instrument detects an overrange or underrange condition of the main input, the servomotor is driven to its high limit position.
  - Cnd.b = When the instrument detects an overrange or underrange condition of the main input, the servomotor is driven to its low limit position.
  - Cnd.C = When the instrument detects an overrange or underrange condition of the main input, the action on servomotor is the complement of “standard” setting.

SF.UL - Output safety value - [C.G10]

This parameter will be available only when "SF.Cn" [C.G09] is equal to “Ov.Un”, “OvEr” or “Undr”.
Range:
- from 0.0 % to 100.0 % if device is configured with one control output;
- from -100.0 % to 100.0 % if device is configured with two control outputs (split range excluded).

CONFIGURATION GROUP 5 [C.Hxx]
DIGITAL INPUT/OUTPUT CONFIGURATION

CnF.5

In.Ot

d1.Fn - Logic input "DIG 1" function - [C.H01]

This parameter will be available only when input contact option is fitted.

Range: nonE = Input contact not used

ru.SL = Input contact used for RUN /HOLD selection. The status is related to the input level (RUN when the logic level is "1").
NOTE: when an input is programmed as RUN/HOLD selector related with the status, the RUN/HOLD selection by keyboard has no effect.

ru.St = Input contact used for RUN /HOLD selection. The instrument toggles from one status to the other one when the transition selected by "d1.St" [C.H02] is detected.
NOTE: for more details about the RUN/HOLD selection, see the related note at pag.54.

Pr.Ab = Input contact used for program abort (Abort when the logic level is equal to "1").
NOTE: for ABORT function only, the input status must be maintained for more than 3 seconds.

Pr.SL = Input contact used for program selection (for more details see note 2).

Au.ñA = Input contact used for Auto/Manual selection (Manual when logic level is “1”)

O.LIñ = Input contact used for output limiter activation (Output limited when logic level is “1”)

ñ.rSt = Input contact used to reset (acknowledge) alarm (Reset when logic level is “1”)

rE.dr = Input contact used for Reverse/Direct control action selection (Direct when logic level is “1”)

NOTE: When logic input circuits are not mounted the middle display will show “no.Pr” (not present).

Notes about logic inputs used for program selection

1) When some logic inputs are programmed as program selectors ("Pr.SL") the instrument will use these logic inputs as a binary code.
   In the sequence from DIG 1 to 3 and IN 1 to IN 8 the instrument will considers the first logic input, programmed as program selector, as the less significant bit while it will consider the other inputs with increasing order.
   For example:
   DIG 2, DIG 3, IN 3, IN 7 and IN 8 are programmed as program selectors. The DIG 2 is the less significant bit while IN 8 in the most significant bit.
   The weight of these 5 inputs is the following:

IN 8	IN 7	IN 3	DIG 3	DIG 2
2^4	2^3	2^2	2^1	2^0
16	8	4	2	1

2) If the program number 0 or a program number higher than 99 (90 simple programs + 9 linked programs) is selected, the instrument will ignore the program selection made by logic inputs and it allows to make the program selection by keyboard or by serial link.
3) If a not existing program (a program from 1 to 99) is selected by logic inputs, the instrument will use the selection made by logic input and it will inhibit the selection made by keyboard or serial link but the RUN request will not produce any effect.
4) A changement on the program selectors status has effect only at the next RUN request.

Notes about logic inputs used for RUN/HOLD selection

At power up the instrument can start (see also "St.Fn" [C.G06] and "St.Pr" [C.G07] parameters):

1) in manual mode
   In this mode the RUN/HOLD logic input has no effect.
2) in stand-by mode
   2.a) If "ru.SL" is selected, the RUN/HOLD logic input status has no effect and the program will start when the instrument detects the transition from the logic level 0 to 1 (from HOLD to RUN)
   2.b) If "ru.St" is selected, the program will start when the instrument detects the transition programmed by "d1.St" [C.H02] parameter.
3) in RUN mode
   3.a) If "ru.SL" is selected, the RUN/HOLD logic input status defines the instrument status (logic level 0 for HOLD and logic level 1 for RUN)
   3.b) If "ru.St" is selected, the program starts in the same way it was left prior to power shut down (HOLD or RUN).

NOTE: When the transfert from controller to programmer mode is performed, the instrument starts in stand by status.

d1.St - Logic input DIG1 - contact status - [C.H02]

This parameter will be available only when "d1.Fn" [C.H01] is different from “nonE”.

Range: CLSd = The input is at logic level “1” when contact is closed.
When "d1.Fn" [C.H01] is equal to “ru.St”, the instrument toggles from one status to the other one when the transition from contact open to contact close is detected.

OPEn = The input is at logic level “1” when contact is open.
When "d1.Fn" [C.H01] is equal to “ru.St”, the instrument toggles from one status to the other one when the transition from contact close to contact open is detected.

d2.Fn - Logic input DIG 2 function - [C.H03]

This parameter will be available only when input contact option is fitted.

Range: nonE = Input contact not used

ru.SL = Input contact used for RUN /HOLD selection. The status is related to the input level (RUN when the logic level is "1").
NOTE: when an input is programmed as RUN/HOLD selector related with the status, the RUN/HOLD selection by keyboard has no effect.

ru.St = Input contact used for RUN /HOLD selection. The instrument toggles from one status to the other one when the transition selected by "d2.St" [C.H04] is detected.
NOTE: for more details about the RUN/HOLD selection, see the related note at pag.54.

Pr.Ab = Input contact used for program abort (Abort when the logic level is equal to "1").
NOTE: for ABORT function only, the input status must be maintained for more than 3 seconds.

Pr.SL = Input contact used for program selection (for more details see NOTE 2) of the "d1.Fn" ("Logic input 1 function" [C.H01]) parameter).

Au.ñA = Input contact used for Auto/Manual selection (Manual when logic level is “1”)

O.Llñ = Input contact used for output limiter activation (Output limited when logic level is “1”)

ñ.rSt = Input contact used to reset (acknowledge) alarm (Reset when logic level is “1”)

rE.dr = Input contact used for Reverse/Direct control action selection (Direct when logic level is “1”)

NOTE: See also all NOTES of the "d1.Fn" ("Logic input 1 function" [C.H01]) parameter.

d2.St - Logic input DIG 2 - contact status - [C.H04]

This parameter will be available only when "d2.Fn" [C.H03] is different from “nonE”.

Range: CLSd = The input is at logic level “1” when contact is closed.
When "d2.Fn" [C.H03] is equal to “ru.St”, the instrument toggles from one status to the other one when the transition from contact open to contact close is detected.

OPEn = The input is at logic level “1” when contact is open.
When "d2.Fn" [C.H03] is equal to “ru.St”, the instrument toggles from one status to the other one when the transition from contact close to contact open is detected.

d3.Fn - Logic input DIG 3 function - [C.H05]

This parameter will be available only when input contact option is fitted.

Range: nonE = Input contact not used

ru.SL = Input contact used for RUN /HOLD selection. The status is related to the input level (RUN when the logic level is "1").
NOTE: when an input is programmed as RUN/HOLD selector related with the status, the RUN/HOLD selection by keyboard has no effect.

ru.St = Input contact used for RUN /HOLD selection. The instrument toggles from one status to the other one when the transition selected by "d3.St" [C.H06] is detected.
NOTE: for more details about the RUN/HOLD selection, see the related note at pag.54.

Pr.Ab = Input contact used for program abort (Abort when the logic level is equal to "1").
NOTE: for ABORT function only, the input status must be maintained for more than 3 seconds.

Pr.SL = Input contact used for program selection (for more details see NOTE 2) of the "d1.Fn" ("Logic input 1 function" [C.H01]) parameter).

Au.ñA = Input contact used for Auto/Manual selection (Manual when logic level is “1”)
O.Llñ = Input contact used for output limiter activation (Output limited when logic level is “1”)
ñ.rSt = Input contact used to reset (acknowledge) alarm (Reset when logic level is “1”)
rE.dr = Input contact used for Reverse/Direct control action selection (Direct when logic level is “1”)

NOTE: See also all NOTES of the "d1.Fn" ("Logic input 1 function" [C.H01]) parameter.

d3.St - Logic input DIG 3 - contact status - [C.H06]

This parameter will be available only when "d3.Fn" [C.H05] is different from “nonE”.

Range: CLSd = The input is at logic level “1” when contact is closed.
When "d3.Fn" [C.H05] is equal to “ru.St”, the instrument toggles from one status to the other one when the transition from contact open to contact close is detected.
OPEn = The input is at logic level “1” when contact is open.
When "d3.Fn" [C.H05] is equal to “ru.St”, the instrument toggles from one status to the other one when the transition from contact close to contact open is detected.

i1.Fn - Logic input IN 1 function - [C.H07]

This parameter will be available only when additional input contact option is fitted.

Range: nonE = Input contact not used
ru.SL = Input contact used for RUN /HOLD selection. The status is related to the input level (RUN when the logic level is "1").
NOTE: when an input is programmed as RUN/HOLD selector related with the status, the RUN/HOLD selection by keyboard has no effect.
ru.St = Input contact used for RUN /HOLD selection. The instrument toggles from one status to the other one when the transition selected by "I1.St" [C.H08] is detected.
NOTE: for more details about the RUN/HOLD selection, see the related note at pag.54.
Pr.Ab = Input contact used for program abort (Abort when the logic level is equal to "1").

NOTE: for ABORT function only, the input status must be maintained for more than 3 seconds.

Pr.SL = Input contact used for program selection (for more details see NOTE 2) of the "d1.Fn" ("Logic input 1 function" [C.H01]) parameter).

NOTE: See also all NOTES of the "d1.Fn" ("Logic input 1 function" [C.H01]) parameter.

I1.St - Logic input IN 1 - contact status - [C.H08]

This parameter will be available only when "I1.Fn" [C.H07] is different from “nonE”.

Range: CLSd = The input is at logic level “1” when contact is closed.
When "I1.Fn" [C.H07] is equal to “ru.St”, the instrument toggles from one status to the other one when the transition from contact open to contact close is detected.

OPEn = The input is at logic level “1” when contact is open.
When "I1.Fn" [C.H07] is equal to “ru.St”, the instrument toggles from one status to the other one when the transition from contact close to contact open is detected.

The steps C.H07 and C.H08 can be repeated for all the fitted logic input (from IN 2 to IN 8).

F.E. 1 - Event 1 function - [C.H09]

This parameter will be available only when OUT 1 is configured as event annunciator ("O1.Fn" [C.E01] is equal to “Eun.1”).

Range: nonE = Event not used (for Events from 10 to 19 only)

brk.E = Break event

Tlñ.E = Timer event
At the power ON, after a power supply failure, the timer event continues from the same point it was prior to the power failure.

End.c = End of cycle annunciator.
At the end of every cycle, the instrument forces the output programmed as "end of cycle annunciator" in ON status for a time equal to the value assigned to "tE.cY" [C.H11] parameter.

End.P = End of profile annunciator.
At the end of the profile, the instrument forces

the output programmed as "end of profile annunciator" in ON status for a time equal to the value assigned to "tE.Pr" [C.H12] parameter.

run = Program in run mode annunciator (Logic level “1” during the run mode).

wait = Program in wait state annunciator (Logic level “1” when the program is in wait state)

HOld = Program in hold state annunciator (Logic level “1” when the program is in hold state)

O.P.O.= Device in Output Power OFF state (Logic level "1" when the instrument is in "Output Power OFF" state)

ñ.In.E = Error condition (Over-Under-Open-Shrt) on main input (Logic level “1” when error occurs)

Cj.Er = Error condition on CJ measurement (Logic level “1” when error occurs)

A.In.E= Error condition (Over-Under-Open) on auxiliary input (Logic level “1” when error occurs)

ñEA.E = Error condition on main, secondary or CJ inputs (Logic level “1” when error occurs)

Au.ñA = Auto/manual mode annunciator (Logic level “1” when device is in manual mode)

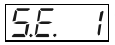

- Event 1 contact status - [C.H10]

This parameter will be available only when OUT 1 is configured as event annunciator ("O1.Fn" [C.E01] is equal to “Eun.1”) or the Event 1 is programmed as Timer event or break event.

Range: CLSd = The output is at logic level “1” when contact is closed

OPEn = The output is at logic level “1” when contact is open

The steps C.H09 and C.H10 can be repeated for all the selected event (from "Event 2" to "Event 4") and for the auxiliary outputs (from "Event 10" to "Event 19").
NOTE: when the auxiliary output hardware is fitted the parameters related with "Event 10" to "Event 19" are ever available.

t.E.Cy - Time for the "End of cycle" annunciator - [C.H11]

Available only when one of the Events is programmed as "End of cycle" annunciator.
Range: from 0 to 240 s.

t.E.Pr - Time for the "End of profile" annunciator - [C.H12]

Available only when one of the Events is programmed as "End of profile" annunciator.
Range: from 0 to 240 s. Above this limit, the display will show "InF" and, at the end of the last programmed cycle, the Event output is forced in ON condition until a new RUN command is detected.

General notes about configuration group 5

1) Digital input function selection should be “consistent” with other configuration parameters otherwise this digital input will remain unused.
2) Changing menu the device will check that the same function is not assigned to more than one digital input (exception made for digital inputs used for program selection), otherwise the display will show:

CnF.5
Err
In.Ot

Pushing the FUNC pushbutton, verify (and modify when necessary) all the group 5 configuration parameters in order to satisfy the previously described condition.

CONFIGURATION GROUP 6 [C.Ixx]
OTHER CONFIGURATION PARAMETERS

CnF.6

OtHr

G.brG - Green bargraph function - [C.I01]

This parameter will be available for 25Q models only.
Range: Pr.Ur = the green bargraph will show the process variable value.
DEV. = the green bargraph will show the deviation (measured value minus set point).

O.brG - Orange bargraph function - [C.I02]

This parameter will be available for 25Q models only.
Range: OP.SP= On bargraph is shown the operative set point value.
P.Out. = On bargraph is shown the process output value.

brG.L - Bargraph initial scale value - [C.I03]

This parameter will be available only when “G.brG” [C.I01] is equal to “Pr.Ur” and/or “O.brG” [C.I02] is equal to “OP.SP”.
Range: From “ñ.In.L” ("Read-out initial scale value" [C.d05]) to “ñ.In.H” ("Read-out full scale value [C.d06])

brG.H - Bargraph full scale value - [C.I04]

This parameter will be available only when “G.brG” [C.I01] is equal to “Pr.Ur” and/or “O.brG” [C.I02] is equal to “OP.SP”.
Range: From “ñ.In.L” ("Read-out initial scale value" [C.d05]) to “ñ.In.H” ("Read-out full scale value [C.d06])

brG.d - Resolution of the deviation bargraph - [C.I05]

This parameter will be available only for 25Q models when “G.brG” [C.I01] is equal to “DEV.”.
Range: 1-2-5-10-20 or 50 = Digits per segment

SP.AL - Operative set point alignment at start up - [C.I06]

Range: ALG = At start up the operative set point is aligned to measured value and then it will reach the selected set point with the programmed ramp (“Grd1” [r.E14] and “Grd2” [r.E15]).
n.ALG = At start up the operative set point is equal to the selected set point

NOTES:
1) The “ALG” selection has no effect when the measure is in error condition.
2) If instrument shutdown has been made during program execution, the SP.AL parameter has no effect and the instrument behaviour is related only to the selection of St.Pr (program restart after power failure [C.G07]) parameter.

SP.dS - Set point display type - [C.I07]

This selection has effect only when the instrument operates as controller.
Range: Fn.SP = When device is in normal display mode and it is performing a set point ramp, the middle display will show the final set point value.
OP.SP= When device is in normal display mode and it is performing a set point ramp, the middle display will show the operative set point value.

Sr.bH - Servomotor behaviour when the output power is limited - [C.I08]

This parameter will be available only when the close loop servomotor control drive is configured

Range: bAL = When the PID output reaches the specific output limits ("Main control output low limit" [r.E04] or "Main control output high limit" [r.E05] or "Secondary control output low limit" [r.E08] or "Secondary control output high limit" [r.E09]) the instrument will reach the respective limit and than it will maintain the output relay in open condition.

n.bAL = When PID value is higher than "Main control output high limit" [r.E05] or "Secondary control output high limit" [r.E09] the OUT 3 (▲) relay contact is ever closed.
When PID value is lower than "Main control output low limit" [r.E04] or "Secondary control output low limit" [r.E08] the OUT 4 (▼) relay contact is ever closed.

SSt.H - Input threshold to enable the soft start - [C.I09]

Range: for TC/RTD ranges - within the input range;
for linear input - within “ñ.In.L” ("Read-out initial scale value" [C.d05]) and ”ñ.In.H” ("Read-out full scale value" [C.d06]).

NOTE: At start up if the measured value is lower than threshold value, the device maintains the output power limiting (”ñ.OLL” [r.E04], ”ñ.OLH” [r.E05], ”S.OLL” [r.E08] and ”S.OLH” [r.E09]) for a programmed time (“tOL” [rE.16]).
This function is called “soft start”
This threshold value has no effect if “tOL” [rE.16] = InF or when one logic input is configured for output limiter activation.

t.OUt - Time out selection - [C.I10]

Range: tñ.10 = 10s time out
tñ.30 = 30s time out

NOTE: for more details see "NOTE 2" at page 28.

Fd.Fn - Out failure detection (OFD) - [C.I11]

This parameter will be available only when the option is fitted and the main and/or the secondary output is configured as time proportional control output

Range: nonE = Function not used

ñC.On = Set “Fd.Fn” to “ñC.On” when the load under test is energized during the ON status of the main output (relay energized or SSR output status 1).

ñC.OF = Set “Fd.Fn” to “ñC.OF” when the load under test is energized during the OFF status of the main output (relay de-energized or SSR output status 0).

SC.On = Set “Fd.Fn” to “SC.On” when the load under test is energized during the ON status of the secondary output (relay energized or SSR output status 1).

SC.OF = Set “Fd.Fn” to “SC.OF” when the load under test is energized during the OFF status of the secondary output (relay de-energized or SSR output status 0).

NOTE: When the option is not fitted the middle display will show “no.Pr”

Fd.HS - Primary current of the current transformer - [C.I12]

This parameter will be available only when “Fd.Fn” [C.I11] is different from “nonE”

Range: From 10 A to 100 A

Fd.OU - Out failure detection - output assignment - C.I13

This parameter will be available only when “Fd.Fn” [C.I11] is different from “nonE”

Range: nonE = The "Out failure detection" alarm is signalled only on display

OUt.1 = The "Out failure detection" alarm is signalled on OUT 1

OUt.2 = The "Out failure detection" alarm is signalled on OUT 2

OUt.3 = The "Out failure detection" alarm is signalled on OUT 3

OUt.4 = The "Out failure detection" alarm is signalled on OUT 4

NOTE: "Out failure detection "alarm annunciator cannot be assigned to an output already configured as control output.

En.Ck - Automatic start enabling - [C.I14]

This parameter will be available only when the clock calendar hardware is mounted.

Range: nonE = The "Automatic start" function is disabled

Cnd.A = the program will start at the programmed time only if the following conditions are satisfied:
- no other program is running
- no power down is present when the current time coincides with the programmed start time;
- when a logic input is programmed for RUN/HOLD function related input level, the input level must be "1";
- the instrument isn't in manual mode.

Cnd.b = at the programmed start time the instrument verify the above described conditions and, if one or more conditions are not satisfied, the instrument will continue to verify it for the programmed hysteresis time.
If the wrong condition disappeares during the hysteresis time, the instrument will start the selected program otherwise it does not start any program.

Hy.tn - Hysteresis of the Automatic starting - [C.I15]

This parameter will be available only when the clock calendar hardware is mounted and the "En.Ck" [C.I.14] parameter is set to "Cnd.b".

Range: from 0.01 (hh.mm) to 6.00 (hh.mm).

t inC - Current time - [C.I16]

This parameter will be available only when the clock calendar hardware is mounted and the "En.Ck" [C.I.14] parameter is different from "nonE".

Range: from 0.00 (hh.mm) to 23.59 (hh.mm).

dAY - Current day - [C.I17]

This parameter will be available only when the clock calendar hardware is mounted and the "En.Ck" [C.I.14] parameter is different from "nonE".

Range:
- ñon = Monday
- tUe = Tuesday
- yEd = Wednesday
- tHU = Thursday
- Fri = Friday
- SAt = Saturday
- Sun = Sunday

CONFIGURATION GROUP VERF [C.Lxx]
CLOCK AND INPUT/OUTPUT TEST

VErF

In.Ot.

This group is displayed only when configuration modify mode is enabled.
This group allows to verify the correct working of:
- the clock calendar,
- the relay outputs (OUT 1 up to OUT4),
- digital inputs (diG.1 up to diG.3),
- the auxiliary inputs from In1 up to In8 and the relays of the auxiliary outputs from OUT10 up to OUT19, if the optional I/O card is fitted.

When an output is in "On" status, the related LED will light up

CLOK - Clock calendar test - [C.L01]

This parameter is available only if the clock calendar option is fitted.
Middle display: minutes and seconds
NOTE: The clock calendar working is identified by the running of the seconds.

OU. 1 - OUT 1 status - [C.L02]

Range: On = Output enabled (relay energized)
OFF = Output disabled (relay deenergized)
NOTE: By pushing the ▲ or ▼ key it is possible to change the output state. It is possible to verify the remaining outputs (OUT 2 up to OUT 4) as described for OUT 1.

OU. 10 - Auxiliary OUT 10 status - [C.L03]

This parameter is available only if the optional card is fitted.
Range: On = Output enabled (relay energized)
OFF = Output disabled (relay deenergized)
NOTE: By pushing the ▲ or ▼ key it is possible to change the auxiliary output state. It is possible to verify the remaining auxiliary outputs (OUT 11 up to OUT 19) as described for OUT 10.

diG.1 - Digital input dIG.1 status - [C.L04]

Range: Open = Input open
CLSd = Input closed
NOTES:
1) This is a reading parameter only, it shows the input status.
2) In case of problem, connect the input and the related common terminals with a copper conductor, if the display shows "CLSd", the problem is located after the instrument.
3) It is possible to verify the remaining digital inputs (diG2 and diG3) as described for diG 1.

In. 1 - Auxiliary input In.1 status - [C.L05]

This parameter is available only if the optional card is fitted.
Range: Open = Input open
CLSd = Input closed
NOTES:
1) This is a reading parameter only, it shows the input status.
2) In case of problem, connect the input and the related common terminals with a copper conductor, if the display shows "CLSd", the problem is located after the instrument.
3) It is possible to verify the remaining digital inputs (In 2 up to In 8) as described for In 1.

General note for configuration group "VErF"
Returning in the "run time mode", the instrument restarts to control the process, the settings performed into this group do not affect the working settings.

CONFIGURATION GROUP END [C.Mxx]
END CONFIGURATION
This group will be displayed only when configuration modify mode is enabled.

CONF

End.

Range: nO = with this selection the instrument comes back to the first display of the configuration modify mode
YES = this selection ends the configuration modify mode; the instrument preforms an automatic reset and restarts the run time mode.

Pushing "▲" or "▼" push-button to select the desired action and then push "MENU" push-button.

RUN TIME MODE

Preliminary

If V101 is correctly set (see "Operative mode and hardware lock" at page 23), and the configuration mode has been terminated, the instrument will be in run time mode.
During run time mode the instrument performs the loop control and manages all the instrument functions (SMART, ALARMS, etc.).

The run time mode is divided in two sub-modes:
- programmer mode (the instrument operates as programmer and common setter)
- controller mode (the instrument operates as a simple controller)

At power up the instrument will start in the same Sub-mode it was prior to the power down (controller mode or programmer mode). The current operative mode is shown by the status of the PRG LED indicator (ON when the programmer sub-mode is selected).

CONTROL PARAMETERS

The run time parameters are common for programmer and for controller mode (exception made for group P and group 9 available only when the instrument operates in programmer mode).

CONTROL PARAMETERS PROTECTION

Moving from one run time parameter group to another, the instrument will show, at first, the group number (on the upper display), the mnemonic code (on the lower display) and the security status (on the middle display) of the group.
The possible security status are:

Enb = the parameters of this group are not protected and they may be modified;

inh = the parameters of this group are ever protected and they cannot be modified

KEY = the parameters of this group are software protected. In this case, using “▲“ and “▼” push-button set a value equal to the security code programmed during the "Run time security code " (see page 24) and then push “FUNC”.
If the programmed value matches the security code, the parameters of this group can be modified otherwise they remain protected.

ATTENTION: One software key protects one or more run time parameter groups so that when the software key is set, it is possible to modify the run time parameters of all groups.
The software protection will be automatically restored when the instrument comes back to the "normal display mode" (by "MENU" push-button pressure or by the time out).

The parameter monitoring and modification are subjected to a time out (see “t.out” [C.I10] parameter) after that, the display returns in “Normal display mode” and the eventual modification of the last displayed parameter will be lost.

CONTROL PARAMETERS MODIFICATION

By “MENU” push-button it is possible to start the run time parameter modification by selecting desired run time parameter group.

During the run time parameter modification, the upper display shows the selected parameter group, the lower display shows the mnemonic code of the selected parameter while the central display shows the value or status assigned to the selected parameter.

NOTES:

1) In the following pages we will describe all the parameter of the instrument. The instrument, however, will show only the parameters related with the specific hardware and in accordance with the specific instrument configuration.
2) If all the parameters of a group are not available, the instrument will not display this group.
3) For an easy consultation of this manual, a sheet named "Reference parameter guide" with all the parameter visualizations is enclosed.
   The groups of run time parameters are identified by the "R" letter followed by A, B etc.
   The "code" formed by the group and the row (i.e. R.A01 where "R.A" is run time group1 and "01" is the row 1) is reported, in the user manual, before each parameter description and allows you to quickly find out the respective parameter.

Run time group P [r.Axx]
Program editing

This group is available when the instrument operates as programmer only.

ALL the information about program parameters are reported at paragraph "EDIT mode" at page 114.

Run time group 2 [r.bxx]
COMMAND

Gr. 2
AEY
Cnd

Gr. 2

PrG - Programmer/controller mode selection - [r.b01]

This parameter can be modified only when no program is running.
Range: YES= the device will be operative as programmer
nO = the device will be operative as controller

SP - Main set point - [r.b02]

This parameter is available when the instrument is in controller mode only.
Range: from rL (set point low limit [rE.12]) to rH set point high limit [rE.13]).

Snrt - SMART function - [r.b03]

This parameter is available when the instrument operates in controller mode, at least one control output is configured and SMART function is enabled (“Sñ.Fn” [C.G01]= “Enb”)
Range: OFF = SMART algorithm is deactivated
ON = SMART algorithm is activated
Note: if the transfert from controller to programmer mode is required when the SMART function is active, the instrument automatically disables the SMART function.

O.P.O. - Output Power OFF mode - [r.b04]

This parameter is available only when no program is running.
Range: YES = Output Power OFF mode is active
No = Output Power OFF mode is deactivated

Pr.St - Program selection for clock start - [r.b05]

This parameter is available when the clock option is fitted and enabled ("En.Ck" [CI.14] parameter is different from "nonE").
Range: nonE = Clock start disabled

from 1 to 90 = it is the simple program selected for the clock start.
from L1 to L9= It is the linked program selected for the clock start.

NOTES:
1) If no program has been created, this parameter will be forced to "nonE".
2) It is possible to select the already existing programs only.
3) It is not possible to delete a program selected for the clock start.

St.dy - Day of the clock start - [r.b06]

This parameter is available when the clock option is fitted, enabled and activated ("En.Ck" [CI.14] parameter is different from "nonE" and "Pr.St" [rb.05] parameter is different from "nonE").

Range:
- ñon = Monday
- tUE = Tuesday
- yEd = Wednesday
- tHU = Thursday
- Fri = Friday
- Sat = Saturday
- SUn = Sunday
- ñO.Fr = all the days from monday to friday
- ñO.SA = all the days from monday to saturday
- ALL = all days

St.tñ - Time of clock start - [r.b07]

This parameter is available when the clock option is fitted, enabled and activated ("En.Ck" [CI.14] parameter is different from "nonE" and "Pr.St" [rb.05] parameter is different from "nonE").
Range: from 0.00 to 23.59 (hh.mm).

ñOñ - Current time and day - [r.b08]

This parameter is available when the clock option is fitted, enabled and activated ("En.Ck" [CI.14] parameter is different from "nonE" and "Pr.St" [rb.05] parameter is different from "nonE").
Middle display: current time
from 0.00 (hh.mm) to 23.59 (hh.mm)
Lower display :current day
- ñon = Monday
- tUE = Tuesday
- yEd = Wednesday

Gr. 3

tHU = Thursday
Fri = Friday
Sat = Saturday
SUn = Sunday

NOTE: this is a readable parameter only and it cannot be modified.

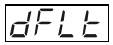

- Group 2 default data loading - [r.b09]

Range: OFF = No loading data
ON = loading data

Run time group 3 [r.Cxx]
ALARM THRESHOLD AND HYSTERESIS VALUE

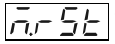

- Manual reset of the alarms - [r.C01]

Range: ON/OFF
Change to ON and then depress “FUNC” key to reset/ acknowledge the alarm condition.

NOTES:
1) The reset/acknowledge function is always enabled.
2) When one of the logic input is configured as alarm reset, both actions (from keyboard and from logic input) are active.

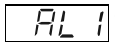

- Alarm 1 threshold - [r.C02]

This parameter is available when alarm 1 is configured as process, deviation, main control output or secondary control output alarm (“A1.tP” [rF.01] = “Proc” or “dEV” or “ñAin” or “SECn”)

Range: - in engineering units within the span limits for process alarm;
- from -1000 to 1000 digits for deviation alarm;
- from 0.0% to 100.0 % for control output alarm.

NOTE: The span limits are configured by “ñ.In.L” [C.d05] and “ñ.In.H” [C.d06].

bA1L - Low threshold used when the alarm 1 is a band alarm - [r.C03]

This parameter is available only when the alarm 1 is configured as band alarm (“A1.tP” [rF.01] = “bAnd”)
Range: from 0 to -1000 digits.

bA1H - high threshold used when the alarm 1 is a band alarm - [r.C04]

This parameter is available only when the alarm 1 is configured as band alarm (“A1.tP” [rF.01] = “bAnd”)
Range: from 0 to 1000 digits.
NOTE: The "bA1.L" and "bA1.h" values are algebraically added to the operative set point in order to obtain the band limits.

AL2 - Alarm 2 threshold - [r.C05]

This parameter is available when alarm 2 is configured as process, deviation, main control output or secondary control output alarm (“A2.tP” [rF.05] = “Proc” or “dEV” or “ñAin” or “SECn”)
Range: - in engineering units within the span limits for process alarm;
- from -1000 to 1000 digits for deviation alarm;
- from 0.0% to 100.0 % for control output alarms.

NOTE: The span limits are configured by “ñ.In.L” [C.d05] and “ñ.In.H” [C.d06].

bA2L - Low threshold used when the alarm 2 is a band alarm - [r.C06]

This parameter is available only when the alarm 2 is configured as band alarm (“A2.tP” [rF.05] = “bAnd”)
Range: from 0 to -1000 digits.

Gr. 3

bA2.H - high threshold used when the alarm 2 is a band alarm - [r.C07]

This parameter is available only when the alarm 2 is configured as band alarm (“A2.tP” [rF.05] = “bAnd”)
Range: from 0 to 1000 digits.
NOTE: The "bA2.L" and "bA2.h" values are algebraically added to the operative set point in order to obtain the band limits.

Gr. 3

AL.3 - Alarm 3 threshold - [r.C08]

This parameter is available when alarm 3 is configured as process, deviation, main control output or secondary control output alarm (“A3.tP” [rF.09] = “Proc” or “dEV” or “ñAin” or “SECn”)
Range:
- in engineering units within the span limits for process alarm;
- from -1000 to 1000 digits for deviation alarm;
- from 0.0% to 100.0 % for control output alarms.

NOTE: The span limits are configured by “ñ.In.L” [C.d05] and “ñ.In.H” [C.d06].

bA3.L - Low threshold used when the alarm 3 is a band alarm - [r.C09]

This parameter is available only when the alarm 3 is configured as band alarm (“A3.tP” [rF.09] = “bAnd”)
Range: from 0 to -1000 digits.

bA3.H - high threshold used when the alarm 3 is a band alarm - [r.C10]

This parameter is available only when the alarm 3 is configured as band alarm (“A3.tP” [rF.09] = “bAnd”)
Range: from 0 to 1000 digits.
NOTE: The "bA3.L" and "bA3.h" values are algebraically added to the operative set point in order to obtain the band limits.

AL.4 - Alarm 4 threshold - [r.C11]

This parameter is available when alarm 4 is configured as process, deviation, main control output or secondary control output alarm (“A4.tP” [rF.13] = “Proc” or “dEV” or “ñAin” or “SECn”)
Range:
- in engineering units within the span limits for process alarm;
- from -1000 to 1000 digits for deviation alarm;
- from 0.0% to 100.0 % for control output alarms.

NOTE: The span limits are configured by “ñ.In.L” [C.d05] and “ñ.In.H” [C.d06].

bA4.L - Low threshold used when the alarm 4 is a band alarm - [r.C12]
This parameter is available only when the alarm 4 is configured as band alarm (“A4.tP” [rF.13] = “bAnd”)
Range: from 0 to -1000 digits.

bA4.H - high threshold used when the alarm 4 is a band alarm - [r.C13]
This parameter is available only when the alarm 4 is configured as band alarm (“A4.tP” [rF.13] = “bAnd”)
Range: from 0 to 1000 digits.
NOTE: The "bA4.L" and "bA4.h" values are algebraically added to the operative set point in order to obtain the band limits.

AL.Fd - Output failure detection low alarm threshold - [r.C14]
This parameter is available only when the option is present and “Fd.Fn” [C.I11] is different from "nOnE".
Range: from 0 to "Fd.HS" [C.I12].

NOTES:
1) The device is in alarm status when the current, measured during the ON status of the load, is lower than this threshold.
2) The OFD (output failure detection) alarm threshold resolution values is equal to 0.1 A for range up to 25 A and 1 A for range up to 100 A
3) The hysteresis on this threshold values is fixed to 1% of fsv.

AH.Fd - Output failure detection high alarm threshold - [r.C15]
This parameter is available only when the option is present and “Fd.Fn” [C.I11] is different from "nOnE".
Range: from 0 to "Fd.HS" [C.I12].
NOTES:
1) The device is in alarm status when the current, measured during the OFF status of the load (leakage current), is higher than this threshold.
2) The OFD (output failure detection) alarm threshold resolution values is equal to 0.1 A for range up to 25 A and 1 A for range up to 100 A
3) The hysteresis on this threshold values is fixed to 1% of fsv

HSA1 - Alarm 1 hysteresis - [r.C16]

This parameter is available only when Out 1 is configured as alarm output (“O1.Fn” [C.E01] = “ALr.1”)
Range: from 1 to 200 digits

HSA2 - Alarm 2 hysteresis - [r.C17]

This parameter is available only when Out 2 is configured as alarm output (“O2.Fn” [C.E02] = “ALr.2”)
Range: from 1 to 200 digits

HSA3 - Alarm 3 hysteresis - [r.C18]

This parameter is available only when Out 3 is configured as alarm output (“O3.Fn” [C.E03] = “ALr.3”)
Upper display: Gr.3
Lower display: HSA3
Range: from 1 to 200 digits

HSA4 - Alarm 4 hysteresis - [r.C19]

This parameter is available only when Out 4 is configured as alarm output (“O4.Fn” [C.E04] = “ALr.4”)
Range: from 1 to 200 digits

dEFt - Group 3 default data loading - [r.C20]

Range: OFF = No loading data
ON = Loading data

Run time group 4 [r.dxx]
CONTROL PARAMETERS

Gr. 4
AEY
Cntr

NOTE: when SMART function is activated, all the Group 4 parameters cannot be modified.

Pb **- Proportional band - [r.d01]**

This parameter is available when at least one control output is configured.
Range: from 0.5% to 999.0% of the input span.
Set 0.0% for On/OFF control action

NOTES:
1) The Pb resolution will be equal to 0.1% up to 10.0% and 1% up to 999.0.
2) When device is working with SMART algorithm the “Pb” value will be limited as selected by parameters “Pb.Hi” [r.M02] and “Pb.Lo” [r.M01].

HYS **- Hysteresis (for ON/OFF control) - [r.d02]**

This parameter is available when Pb [r.d01]=0 (On/OFF control action)
Range: from 0.1% to 10.0% of the input span.

ti **- Integral time - [r.d03]**

This parameter is available when at least one control output is configured and Pb [r.d01] is different from 0.
Range: from 00.01 to 20.00 mm.ss
Above this value the display blanks and the integral action is excluded

NOTE: When device is working with SMART algorithm the “ti” value will be limited as selected by “ti.Hi” [r.M04] and “ti.Lo” [r.M03].

td **- Derivative time - [r.d04]**

This parameter is available when at least one control output is configured, “Cn.tP” [C.G02] is equal to “Pid” and "Pb" [r.d01] is different from 0.
Range: From 00.00 to 10.00 mm.ss

NOTES:
1) When device is working with SMART algorithm and “Cn.tP” [C.G02] is equal to “Pid”, the “td” value will be made equal to a quarter of “ti” value.
2) When “Cn.tP” [C.G02] is equal to “Pi”, the derivative action is excluded

Gr. 4

IP - Integral preload - [r.d05]

This parameter is available when at least one control output is configured and "Pb" [r.d01] is different from 0.
Ranges:
- from 0.0 to 100.0 % of the output when device is configured with only one control output
- from -100.0 to 100.0 % of the output when device is configured with two control outputs (split range excluded)

r.Gn - Relative secondary output gain - [r.d06]

This parameter is available when two control outputs are configured (split range excluded) and "Pb" [r.d01] is different from 0.
Range: from 0.20 to 2.00

OLAP - Overlap/dead band between main and secondary outputs - [r.d07]

This parameter is available when two control outputs are configured (split range excluded) and "Pb" [r.d01] is different from 0.
Range: from -20 to 50
NOTE: A negative value means a dead band while a positive value means an overlap.

Cn.AC - Control action - [r.d08]

Range: rEv = reverse action
dir = direct action

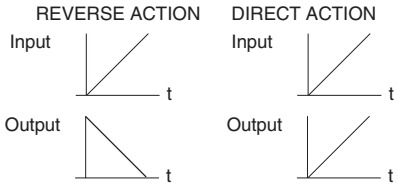

NOTES:
1) When device is configured with two control outputs (split range excluded) the control action is forced to reverse and it cannot be modified.
2) When direct/reverse selection is performed by a logic input this parameter allows you to monitor the current selected action only.

General notes about PID parameters
The standard PID parameters (the PID parameters not related with a PID group) are the real parameters used during run time mode.
During a program execution, if a specific PID group is assigned to a segment, the instrument assignes to the standard PID parameter the values programed for the specific PID group.
For this reason, if a standard PID parameter is modified, no changement is made on the PID groups while if a changement is made on the PID group currently used, the standard PID parameters will be immediately aligned to it.

Pb 1 - Proportional band of the first PID group - [r.d09]
This parameter is available when at least one control output is configured and the instrument is in programmer mode.
Lower display: Pb x where x is the number of the selected PID group.
Range: from 0.5% to 999.0% of the input span.
Set 0.0% for On/OFF control action
NOTES:
1) The Pb resolution will be equal to 0.1% up to 10.0% and 1% up to 999.0 %.
2) When device is working with SMART algorithm the “Pb” value will be limited as selected by parameters “Pb.Hi” [r.M02] and “Pb.Lo” [r.M01].

HYS 1 - Hysteresis (for ON/OFF control) of the first PID group - [r.d10]

This parameter is available when Pb [r.d01]=0 (On/OFF control action) and the instrument is in programmer mode.
Lower display: HYS x where x is the number of the selected PID group.
Range: from 0.1% to 10.0% of the input span.

Gr. 4

ti 1 - Integral time of the first PID group - [r.d11]

This parameter is available when at least one control output is configured, Pb [r.d01] is different from 0 and the instrument is in programmer mode..
Lower display: ti x where x is the number of the selected PID group.
Range: from 00.01 to 20.00 mm.ss
Above this value the display blanks and the integral action is excluded
NOTE: When device is working with SMART algorithm the “ti” value will be limited as selected by “ti.Hi” [r.M04] and “ti.Lo” [r.M03].

td 1 - Derivative time of the first PID group - [r.d12]

This parameter is available when at least one control output is configured, “Cn.tP” [C.G02] is equal to “Pid”, "Pb" [r.d01] is different from 0 and the instrument is in programmer mode.
Lower display: td x where x is the number of the selected PID group.
Range: From 00.00 to 10.00 mm.ss
NOTES:
1) When device is working with SMART algorithm and “Cn.tP” [C.G02] is equal to “Pid”, the “td” value will be equal to a quarter of “ti” value.
2) When “Cn.tP” [C.G02] is equal to “Pi”, the derivative action is excluded

IP 1 - Integral preload of the first PID group - [r.d13]

This parameter is available when at least one control output is configured, "Pb" [r.d01] is different from 0 and the instrument is in programmer mode.

Lower display: IP x where x is the number of the selected PID group.

Ranges:

- from 0.0 to 100.0 % of the output when device is configured with only one control output
- from -100.0 to 100.0 % of the output when device is configured with two control outputs (split range excluded)

rGn1 - Relative secondary output gain of the first PID group - [r.d14]

This parameter is available when two control outputs are configured (split range excluded), "Pb" [r.d01] is different from 0 and the instrument is in programmer mode.

Lower display: r.Gnx where x is the number of the selected PID group.

Range: from 0.20 to 2.00

OLP1 - Overlap/dead band between main and secondary outputs of the first PID group - [r.d15]

This parameter is available when two control outputs are configured (split range excluded), "Pb" [r.d01] is different from 0 and the instrument is in programmer mode.

Lower display: OLPx where x is the number of the selected PID group.

Range: from -20 to 50

NOTE: A negative value means a dead band while a positive value means an overlap.

NOTE: For PID group 2 to 5, the instrument will show on the lower display the respective PID group number and it is possible to perform the same setting described for PID group 1.

dFLt - Group 4 default data loading - [r.d16]

Range: OFF = No loading data
ON = Loading data

Run time group 5 [r.Exx]
AUXILIARY CONTROL PARAMETER

Gr. 5
AEY
A.Ctr

Gr. 5

Ar.y - Anti reset wind up - [r.E01]

This parameter is available when at least one control output is configured and "Pb" [r.d01] is different from 0.
Range: from 10% to 200% of the input span

Sñ.tt - Servo motor travel time - [r.E02]

This parameter is available when the open loop servomotor control drive output is configured (“O3.Fn” [C.E03] is equal to “ñC.Sñ” or “SC.Sñ” and “Sñ.tP” [C.E05] is equal to “OPEn”).
Range: from 0.12 to 3.00 m.ss

Sñ.db - Servo motor dead band - [r.E03]

This parameter is available when the servomotor control drive output is configured (“O3.Fn” [C.E03] is equal to “ñC.Sñ” or “SC.Sñ”).
Range: from 1% to 50%

ñ.OLL. - Main control output low limit - [r.E04]

This parameter is available when one control output is configured as main output.
Range: from 0.0 % (of the output span) to ñ.OLH [r.E05]

ñ.OLH - Main control output high limit - [r.E05]

This parameter is available when one control output is configured as main output.
Range: from ñ.OLL [r.E04] to 100.0 % of the output span.

n.rnP - Main control output max rate of rise - [r.E06]

This parameter is available when one control output is configured as main output.
Ranges: from 0.1%/s to 25.0%/s.
Above this value the display shows “Inf” meaning that no limit is imposed

NOTES:

1) This parameter will be active even if device is configured for On/OFF control.
2) During the transfert from AUTO to MANUAL, if this action is programmed as a not bumpless transfer, the “ñ.rñP” function will be ignored and the output will step up to the value set by “Añ.UL” [C.G04] parameter.

nCCy - Main output cycle time - [r.E07]

This parameter is available when a time proportional main control output is configured.
Range: from 1 to 200 s

S.OLL - Secondary control output low limit - [r.E08]

This parameter is available when one control output is configured as secondary control output.
Range: From 0.0 % of the output span to S.OLH [r.E09].

S.OLH - Secondary control output high limit - [r.E09]

This parameter is available when one control output is configured as secondary control output.
Range: from S.OLL [r.E08] to 100.0 % of the output span

S.rnP - Secondary control output max rate of rise - [r.E10]

This parameter is available when one control output is configured as secondary control output.
Ranges: from 0.1%/s to 25.0%/s.
Above this value the display shows “Inf” meaning that no limit is imposed

NOTES:

1) This parameter will be active even if device is configured for ON/OFF control.
2) During the transfer from AUTO to MANUAL, if this action is programmed as a not bumpless transfer, the “S.rñP” function

will be ignored and the output will step up to the value set by “Añ.UL” [C.G04] parameter.

SCCY - Secondary output cycle time - [r.E11]

This parameter is available when a time proportional secondary control output is configured.
Range: from 1 to 200 s

rL - Set point low limit - [r.E12]

Range: From “ñ.In.L” [C.d05] to rH [r.E13].
NOTES: Whenever “ñ.In.L” [C.d05] has been modified, the following occurs:
1) rL will be realigned to it;
2) if the set point values are out of the new limits, "rL" automatically assumes the default value.

rH - Set point high limit - [r.E13]

Range: from rL [r.E12] to “ñ.In.H” [C.d06].
NOTES: Whenever “ñ.In.H” [C.d06] has been modified, the following occurs:
1) rH will be realigned to it;
2) if the set point values are out of the new limits, "rH" automatically assumes the default value.

Urd1 - Rate of change for positive set point variations - [r.E14]

Range: from 1 to 200 digits per minute.
Above this value the display shows “Inf” and the transfer will be a step change.

Urd2 - Rate of change for negative set point variations - [r.E15]

Range: from 1 to 200 digits per minutes.
Above this value the display shows “Inf” and the transfer will be a step change.

tOL - Time out for the soft start - [r.E16]

This parameter is available when at least one output is configured as control output and no logic input is configured as “Output limiter activator”.
Range: from 1 to 540 min.
Above this value the display shows “InF” and the limiting action is always active.
NOTE: The tOL can be always modified but the new value will be used only at the next device power up

E.An - External control for AUTO /MANUAL mode - [r.E17]

This parameter is available when one of the logic inputs is configured for Auto/Manual selection and no program is running.
Range: On the Auto/Manual selection is made by logic input only
OFF the Auto/Manual selection is made by “Man” key or serial link only.

E.rd - External control for reverse/direct output action selection - [r.E18]

This parameter is available when one of the logic inputs is configured for direct/reverse output action selection.
Range: On the reverse/direct selection is made by external contact only
OFF the reverse/direct selection is made by “Cn.Ac” [r.d08] parameter or serial link only.

dFLt - Group 5 default data loading - [r.E19]

Range: OFF = No loading data
ON = Loading data

Gr. 6

Run time group 6 [r.Fxx]
ALARM SETTING

Gr. 6
AEY
A.SEt

Gr. 6

A 1.tP - Alarm 1 type - [r.F01]

This parameter is available only when OUT 1 is configured as alarm 1 output (“O1.Fn” [C.E01] = “ALr.1”)

Range: Proc = Alarm on process variable
bAnd = Band alarm on process variable
dEV = Deviation alarm on process variable
ñAin = Alarm on Main control output value
SECn = Alarm on Secondary control output value

NOTE: When alarm type has been changed the alarm threshold will be forced to its default value and alarm status will be deleted.

A 1.Cn - Alarm 1 configuration - [r.F02]

This parameter is available only when OUT 1 is configured as alarm 1 output (“O1.Fn” [C.E01] = “ALr.1”)

Range: H.A. = High alarm (outside band) with automatic reset
L.A. = Low alarm (inside band) with automatic reset
H.A.Ac= High alarm (outside band) with automatic reset and acknowledge
L.A.Ac= Low alarm (inside band) with automatic reset and acknowledge
H.L. = High alarm (outside band) with manual reset
L.L. = Low alarm (inside band) with manual reset

NOTE: When alarm configuration has been changed, the alarm status will be deleted.

Example for A1.Cn (A2.Cn, A3.Cn) = H.A.

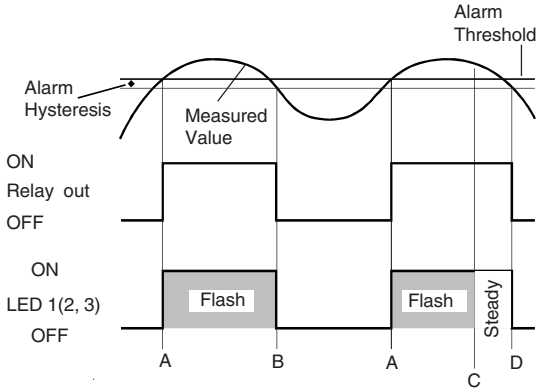

A= alarm condition detection
B= automatic reset of alarm
C= manual reset; the LED gets steady lit, the alarm remains in the alarm status until the process variable reaches the alarm threshold minus hysteresis (D).

Example for A1.Cn (A2.Cn, A3.Cn) = H.A.A.c

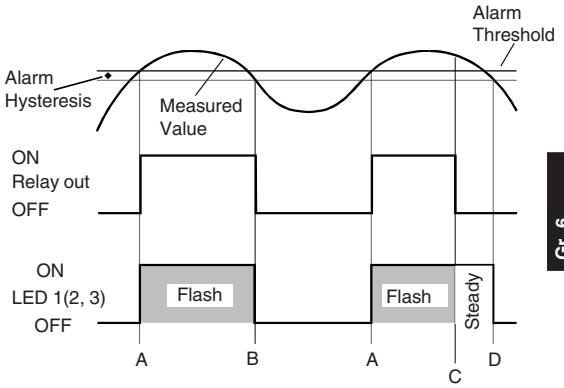

A= alarm condition detection
B= automatic reset of alarm
C= manual reset; the LED gets steady lit, the relay output goes OFF but the LED remains steady lit until the process variable reaches the alarm threshold minus hysteresis (D).

Example for A1.Cn (A2.Cn, A3.Cn) = H.L.

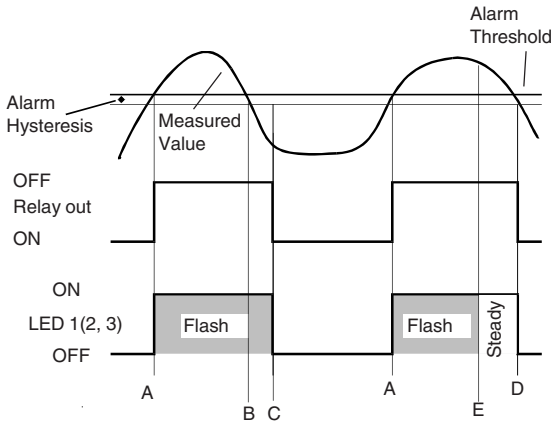

A= alarm condition detection
B= the alarm remains in alarm status (even if the measured value is under the threshold) until a manual reset is performed (C).

E= if a manual reset is performed when the alarm condition still exist; the LED gets steady lit, the alarm remains in the alarm status until the process variable reaches the alarm threshold minus hysteresis (D).

NOTE:
The manual reset (acknowledgement) may be performed by the "ñ.rSt" [R.C01] parameter or by logic input or by serial link.

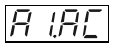

- Alarm 1 action - [r.F03]

This parameter is available only when OUT 1 is configured as alarm 1 output (“O1.Fn” [C.E01] = “ALr.1”)
Range: dir = direct action (Relay energized or SSr=1 in alarm condition)
rEV = Reverse action (Relay energized or SSr=1 in non alarm condition)

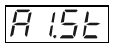

- Alarm 1 stand by (mask) function - [r.F04]

This parameter is available only when OUT 1 is configured as alarm 1 output (“O1.Fn” [C.E01] = “ALr.1”)
Range: OFF = Stand-by function disabled
On = Stand-by function enabled

NOTES:

1) If the alarm is programmed as band or deviation alarm, this function masks the alarm condition after a set point change or at the instrument start-up until process variable reaches the alarm threshold plus or minus hysteresis. If the alarm is programmed as a process alarm or control output alarm, this function masks the alarm condition at instrument start-up until process variable reaches the alarm threshold plus or minus hysteresis.
2) The change from On to OFF has immediate effect, while the change from OFF to On has effect at the next start up or set point change.

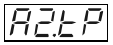

- Alarm 2 type - [r.F05]

This parameter is available only when OUT 2 is configured as alarm 2 output (“O2.Fn” [C.E02] = “ALr.2”)

Range: Proc = Alarm on process variable
bAnd = Band alarm on process variable
dEV = Deviation alarm on process variable
ñAin = Alarm on Main control output value
SECn = Alarm on Secondary control output value

NOTE: When alarm type has been changed the alarm threshold will be forced to its default value and alarm status will be deleted.

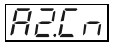

- Alarm 2 configuration - [r.F06]

This parameter is available only when OUT 2 is configured as alarm 2 output (“O2.Fn” [C.E02] = “ALr.2”)

Range: H.A. = High alarm (outside band) with automatic reset
L.A. = Low alarm (inside band) with automatic reset
H.A.Ac= High alarm (outside band) with automatic reset and acknowledge
L.A.Ac= Low alarm (inside band) with automatic reset and acknowledge
H.L. = High alarm (outside band) with manual reset
L.L. = Low alarm (inside band) with manual reset

NOTE: When alarm configuration has been changed, the alarm status will be deleted.

A2.AC - Alarm 2 action - [r.F07]

This parameter is available only when OUT 2 is configured as alarm 2 output (“O2.Fn” [C.E02] = “ALr.2”)

Range: dir = direct action (Relay energized or SSr=1 in alarm condition)
rEV = Reverse action (Relay energized or SSr=1 in non alarm condition)

A2.St - Alarm 2 stand by (mask) function - [r.F08]

This parameter is available only when OUT 2 is configured as alarm 2 output (“O2.Fn” [C.E02] = “ALr.2”)

Range: OFF = Stand-by function disabled
On = Stand-by function enabled

NOTES:

1) If the alarm is programmed as band or deviation alarm, this function masks the alarm condition after a set point change or at the instrument start-up until process variable reaches the alarm threshold plus or minus hysteresis. If the alarm is programmed as a process alarm or control output alarm, this function masks the alarm condition at instrument start-up until process variable reaches the alarm threshold plus or minus hysteresis.
2) The change from On to OFF has immediate effect, while the change from OFF to On has effect at the next start up or set point change

A3.tP - Alarm 3 type - [r.F09]

This parameter is available only when OUT 3 is configured as alarm 3 output (“O3.Fn” [C.E03] = “ALr.3”)

Range: Proc = Alarm on process variable
bAnd = Band alarm on process variable
dEV = Deviation alarm on process variable
ñAin = Alarm on Main control output value
SECn = Alarm on Secondary control output value

NOTE: When alarm type has been changed the alarm threshold will be forced to its default value and alarm status will be cleared.

A3.Cn - Alarm 3 configuration - [r.F10]

This parameter is available only when OUT 3 is configured as alarm 3 output (“O3.Fn” [C.E03] = “ALr.3”)

Range: H.A. = High alarm (outside band) with automatic reset
L.A. = Low alarm (inside band) with automatic reset
H.A.Ac= High alarm (outside band) with automatic reset and acknowledge
L.A.Ac= Low alarm (inside band) with automatic reset and acknowledge
H.L. = High alarm (outside band) with manual reset
L.L. = Low alarm (inside band) with manual reset

NOTE: When alarm configuration has been changed, the alarm status will be deleted.

A3.AC - Alarm 3 action - [r.F11]

This parameter is available only when OUT 3 is configured as alarm 3 output (“O3.Fn” [C.E03] = “ALr.3”)

Range: dir = direct action (Relay energized or SSr=1 in alarm condition)
rEV = Reverse action (Relay energized or SSr=1 in non alarm condition)

A3.St - Alarm 3 standby (mask) function - [r.F12]

This parameter is available only when OUT 3 is configured as alarm 3 output (“O3.Fn” [C.E03] = “ALr.3”)

Range: OFF = Stand-by function disabled
On = Stand-by function enabled

NOTES:

1) If the alarm is programmed as band or deviation alarm, this function masks the alarm condition after a set point change or at the instrument start-up until process variable reaches the alarm threshold plus or minus hysteresis. If the alarm is programmed as a process alarm or control output alarm, this function masks the alarm condition at instrument start-up until process variable reaches the alarm threshold plus or minus hysteresis.
2) The change from On to OFF has immediate effect, while the change from OFF to On has effect at the next start up or set point change

A4.tP - Alarm 4 type - [r.F13]

This parameter is available only when OUT 4 is configured as alarm 4 output (“O4.Fn” [C.E04] = “ALr.4”)

Range: Proc = Alarm on process variable
bAnd = Band alarm on process variable
dEV = Deviation alarm on process variable
ñAin = Alarm on Main control output value
SECn = Alarm on Secondary control output value

NOTE: When alarm type has been changed the alarm threshold will be forced to its default value and alarm status will be deleted.

A4.Cn - Alarm 4 configuration - [r.F14]

This parameter is available only when OUT 4 is configured as alarm 4 output (“O4.Fn” [C.E04] = “ALr.4”)

Range: H.A. = High alarm (outside band) with automatic reset
L.A. = Low alarm (inside band) with automatic reset
H.A.Ac= High alarm (outside band) with automatic reset and acknowledge
L.A.Ac= Low alarm (inside band) with automatic reset and acknowledge
H.L. = High alarm (outside band) with manual reset
L.L. = Low alarm (inside band) with manual reset

NOTE: When alarm configuration has been changed, the alarm status will be deleted.

A4.AC - Alarm 4 action - [r.F15]

This parameter is available only when OUT 4 is configured as alarm 4 output (“O4.Fn” [C.E04] = “ALr.4”)

Range: dir = direct action (Relay energized or SSr=1 in alarm condition)
rEV = Reverse action (Relay energized or SSr=1 in non alarm condition)

A4.St - Alarm 4 stand-by (mask) function - [r.F16]

This parameter is available only when OUT 4 is configured as alarm 4 output (“O4.Fn” [C.E04] = “ALr.4”)

Range: OFF = Stand-by function disabled
On = Stand-by function enabled

NOTES:

1) If the alarm is programmed as band or deviation alarm, this function masks the alarm condition after a set point change or at the instrument start-up until process variable reaches the

alarm threshold plus or minus hysteresis. If the alarm is programmed as a process alarm or control output alarm, this function masks the alarm condition at instrument start-up until process variable reaches the alarm threshold plus or minus hysteresis.

2) The change from On to OFF has immediate effect, while the change from OFF to On has effect at the next start up or set point change

Fd.Fn - OFD (Output Failure Detection) alarm configuration - [r.F17]

This parameter is available only when OFD option is configured (“Fd.Fn” [C.I11] is different from "nOnE").

Range: A. = Alarm with automatic reset
A.Ac = Alarm with automatic reset and acknowledge
L. = Alarm with manual reset

NOTE: When alarm configuration has been changed, the alarm status will be deleted.

Fd.AC - OFD (Output Failure Detection) alarm action - [r.F18]

This parameter is available only when one output is configured as OFD alarm annunciator (“Fd.Fn” [C.I11] and “Fd.Ou” [C.I13] are different from “nonE”).

Range: dir = direct action (Relay energized or SSr=1 in alarm condition)
rEV = Reverse action (Relay energized or SSr=1 in non alarm condition)

NOTE: When OFD output is in OR condition with an alarm or an event output, the “Fd.Ac” parameter can only be monitored but not modified and it assumes the same action defined (by “Alarm Action” or “Event Logic Level”) for the alarm or the event.

dFLt - Group 6 default data loading - [r.F19]

Range: OFF = No loading data
ON = Loading data

Run time group 7 [r.Gxx]
SERIAL LINK PARAMETER

Gr. 7
SEY
Sr.Ln

Gr. 7

S.L.Pr - Serial interface protocol - [r.G01]

Range: OFF = No serial interface
ñbUS = Modbus
jbUS = Jbus

NOTE: When serial interface circuit is not mounted, the middle display will show “no.Pr”

S.L.Ad - Serial link device address - [r.G02]

This parameter is available only when “S.L.Pr” [r.G01] is different from "OFF".
Range: from 1 to 255

S.L.bd - Serial link baud rate - [r.G03]

This parameter is available only when “S.L.Pr” [r.G01] is different from "OFF".
Range: from 600 to 19200 baud (19200 baud is shown, on display, as 19.20)

S.L.bF - Serial link byte format - [r.G04]

This parameter is available only when “S.L.Pr” [r.G01] is different from "OFF".
Range: 8 = 8 bits without parity
8E = 8 bits + even parity
8O = 8 bits + odd parity

dFLt - Group 7 default data loading - [r.G05]

Range: OFF = No loading data
ON = Loading data

Run time group 8 [r.Hxx]
FEEDBACK POTENTIOMETER ADJUSTMENT

Gr. 8
AEY
F.CAL

NOTE: The run time group 8 will be displayed only if the instrument is in MANUAL mode.

EnCL - Feedback potentiometer adjustment enabling - [r.H01]
This parameter is available only when close loop servomotor output or open loop servomotor output with valve position indication is configured.
Range: OFF = this selection disables the feedback potentiometer calibration and the instrument will come back to the first display of the run time group 8.
On = this selection starts the feedback potentiometer adjustment.
NOTE: No time out will be applied during feedback potentiometer calibration procedure.

POSL - Servomotor low limit positioning - [r.H02]
This parameter is available only when feedback potentiometer calibration enabling [r.H01] is equal to On.
Range: 0.0% to 100.0%
The middle display will show the valve position as a percentage of the full input span.
By ▲ and ▼ push-button it is possible to modify the valve position.
When the desired initial position has been reached, push the FUNC push-button.

FbLC - Feedback low limit calibration - [r.H03]
This parameter is available only when feedback potentiometer calibration enabling [r.H01] is equal to On.
Range: OFF = To skip adjustment and hold the previous value select OFF and then push FUNC
On = To memorize the current position as feedback low limit calibration select “On” and then push FUNC

POSH - Servomotor high limit positioning - [r.H04]

This parameter is available only when feedback potentiometer calibration enabling [r.H01] is equal to On.
Range: 0.0% to 100.0%.
The middle display will show the valve position as a percentage of the full input span.
By ▲ and ▼ push-button it is possible to modify the valve position.
When the desired final position has been reached, push the FUNC push-button.

Fb.HC - Feedback high limit calibration - [r.H05]

This parameter is available only when feedback potentiometer calibration enabling [r.H01] is equal to ON.
Range: OFF = To skip adjustment and hold the previous value select OFF and then push FUNC
On = To memorize the current position as feedback high limit calibration select “On” and then push FUNC

This procedure is now completed and the calibration values are automatically checked.
If the adjusted feedback span is greater than 20 % of the potentiometer input span, the instrument memorizes the new values and comes back to the first display of the run time group 8.
Otherwise the old calibration values will be retained and the display will show:

Gr. 8
Err
F.CAL

It will be necessary to repeat the feedback potentiometer adjustment procedure.

dFLt - Group 8 default data loading - [r.H6]

Range: OFF = No loading data
On = loading data

Run time group 9 [r.Ixx]
TRACKING VALUES.

Gr. 9
AEY
trAA

NOTES:
1) this run time group will be shown when the instrument operates in programmer mode only.
2) The tracking function works even if no control output is configured.

t.A 1 **- Tracking group 1 - tracking above - [r.I01]**

Lower display: t.A x where x is the number of the tracking group (from 1 to 10).
Range: from 1 to 500 digits.
NOTES:
1) The tracking above values will be added to the operative set point value in order to obtain the high limit used for tracking and guaranteed soak functions.
2) When a program is running and the tracking above value of the segment in progress has been modified, the new value will be immediately used.

t.b 1 **- Tracking group 1 - tracking below - [r.I02]**

Lower display: t.b x where x is the number of the traking group (from 1 to 10).
Range: from 1 to 500 digits.
NOTES:
1) The tracking below values will be subtracted to the operative set point value in order to obtain the high limit used for tracking and guaranteed soak functions.
2) When a program is running and the tracking below value of the segment in progress has been modified, the new value will be immediately used.

NOTE: For tracking group 2 to 10, the instrument will show on the lower display the respective tracking group number and it is possible to perform the same setting described for tracking group 1.

dFLt - Group 9 default data loading - [r.I03]

Range: OFF = No loading data
On = loading data

Gr. 9

Run time group "dF" [r.Lxx]
DEFAULT RUN TIME PARAMETER LOADING.

Gr.dF
hEY
dFLt

dFLt - Default run time parameter loading - [r.L01]

Default run time parameter loading of all run time parameters (all groups exception made for group 8).

Range: OFF = No loading data
On = the run time parameters of all groups (exception made for group 8) will be forced to their default values.

Run time group "Hd" [r.Mxx]
HIDDEN PARAMETERS - SMART LIMITS

Gr.Hd
KEY
Hidn

NOTE: This group is accessible from every group (exception made for P group) by keeping depressed the “MENU” key for 8 seconds.

Pb.LO - Minimum value of proportional band calculated by SMART algorithm - [r.M01]
This parameter is available only when smart function is configured (“Sñ.Fn” [C.G01] = “Enb”)
Range: From 0.5% to “Pb.Hi” [r.M02].
NOTE: The “Pb.Lo” resolution will be equal to 0.1% up to 10.0% and 1% up to 999.0%.

Pb.HI - Maximum value of proportional band calculated by SMART algorithm - [r.M02]
This parameter is available only when smart function is configured (“Sñ.Fn” [C.G01] = “Enb”)
Range: from “Pb.Lo” [r.M01] to 999.0%
NOTE: The “Pb.Hi” resolution will be equal to 0.1% up to 10.0% and 1% up to 999.0

ti.LO - Minimum value of integral time calculated by SMART algorithm - [r.M03]
This parameter is available only when smart function is configured (“Sñ.Fn” [C.G01] = “Enb”)
Range: from 00.01 mm.ss to “ti.Hi” [r.M04].

ti.HI - Maximum value of integral time calculated by SMART algorithm - [r.M04]
This parameter is available only when smart function is configured (“Sñ.Fn” [C.G01] = “Enb”)
Range: from “ti.Lo” [r.M03] to 20.00 mm.ss

rG.CL - Relative gain of the secondary output calculated by SMART algorithm - [r.M05]

This parameter is available only when smart function is configured (“Sñ.Fn” [C.G01] = “Enb”) and a secondary control output (without split range) is configured.
Upper display: Gr.Hd
Lower display: rG.CL
Range: OFF = Smart algorithm does not calculate “r.Gn” [r.d06] value.
On = Smart algorithm calculates “r.Gn” [r.d06] value.

dFLt - Hidden group default data loading - [r.M06]

Upper display: Gr.Hd
Lower display: dFLt.
Range: OFF = No loading data
On = loading data

PROGRAMMER MODE

When the instrument is in programmer mode the PRG LED is lit.
The following states are possible.

STAND-BY.

It is a transition state where the instrument is first placed when:
- it is switched from CONTROLLER to PROGRAMMER mode;
- a program execution is ended.

The upper display shows the measured variable and the lower display shows the set point (NORMAL DISPLAY mode).
The instrument is operating as controller using the set point used in controller mode (if the transfert from controller mode to programmer mode has been required) or the set point programmed for the end of the last executed pattern.
In STAND-BY mode it is possible:
1) to start a program execution;
2) to EDIT a program;
3) to modify run time parameters;
4) to revert to the CONTROLLER mode;
5) to enter in the MANUAL mode.

EDIT.
In this mode it is possible to select and/or to create a program and to visualize and/or to modify all data of a program.
When the instrument is in EDIT mode, by the RUN pushbutton it is possible to start the selected program execution.
NOTES: the EDIT mode can be activated from:
1) STAND-BY mode, in this situation the instrument continues to operate as in STAND-BY mode and no time out is applied to the group P parameter modification;
2) RUN mode, in this situation the instrument continues to operate as in RUN mode but a 10 s (or 30 s) time out is applied to the group P parameter modification and the running program cannot be modified.

MANUAL.
In this mode the user can set, manually, the control output percentage or the valve position.
The upper display shows the measured value, the middle display shows "ñ." followed by the main power output value and the lower display shows "S." followed by the secondary power output value (for more details see the "MANUAL MODE" paragraph).

The MANUAL mode can be activated:
- manually when the instrument is in STAND-BY mode or
- automatically at the end of a program execution (if programmed).

RUN.
In this mode the instrument operates as programmer with its set point generated according to the selected pattern. The program can be started/stopped by the RUN pushbutton or by an external logic signal.
RUN indicator is lit.
In this mode all data of the running program can be visualized, but they cannot be modified. Furthermore, the relevant control parameters (PB, TI, etc.) can be visualized and modified.

WAIT.
This function temporarily stops a running program whenever the difference between the measured variable and generated set point exceeds the selected tracking band.
The displayed measured value is flashing.
When the above difference reverts within the preset band, the WAIT function is automatically deactivated and the instrument reverts to the RUN mode.

HOLD
This function temporarily stops a running program by a manual action.
The HOLD mode may be activated by the RUN pushbutton pressure or by an external logic contact status.
The set point updating and time count (time event excluded) are stopped and the instrument operates as controller with fixed set point.
A new RUN pushbutton pressure or the changement of the contact status restarts the RUN mode.
During the HOLD mode the HLD led lits and it is possible to activate the ABORT, FAST and JUMP functions.

FAST.
This function is used, during HOLD mode, to quickly select, backward or forward, a different point of the running pattern from where the program will restart with the programmed speed.
The ↘ , → or ↗ indicator is flashing.
During the FAST mode the instrument executes the program 60 times faster than the programmed values ignoring the tracking values.

JUMP.
This function is used, during HOLD mode, to jump to the beginning of the next segment or to the end of the previous one, from where it is desired to restart the program.

Complete operative instructions on all functions and procedures of the PROGRAMMER mode are given in the following pargraph.

BARGRAPH DESCRIPTION
Two 33 LED's bargraphs are available.

On the right bargraph, with orange LED's, it is possible to show:
- the operative set point scaled as configured by "brG.L" [C.I03] and "brG.H" [C.I04].
  The "SP" LED, located on the base of the bargraph, is lighted.
- the power output value.
  The "%" LED, located on the top of the bargraph, is lit.
  When the device has two process outputs, the central LED (which is a two-color LED) becomes green. It divides the bargraph into two parts: the MAIN control output is shown on the upper part while the SECONDARY control output is shown on the lower part.
  If a control output is a servomotor type, the bargraph will show the valve position instead of the power output (the first or last LED's is flashing when the feedback position is out of range 0÷100).

On the left bargraph, with green LED's, it is possible to show:
- the process variable scaled as configured by "brG.L" [C.I03] and "brG.H" [C.I04].
  The "PV" LED, located on the base of the bargraph, is lit.
- The deviation error (PV - SP) with resolution configured at "brG.d" [C.I05].
  The "DEV" LED, located on the top of the bargraph, is lit.
  When the deviation error indication is selected, the central LED (which is a two-color LED) becomes orange. It divides the bargraph in two parts: the positive error is shown on the upper part while the negative error is shown on the lower part.
  The last LED will flash if deviation is out of range.

INDICATORS

°C Lit when process variable is in Centigrade degrees.
°F Lit when process variable is in Fahrenheit degrees.
ST Flashing when the first step of SMART algorithm is activated.
Lit when the second step of SMART algorithm is activated.
RUN Lit when the program is running.
Flashing when the time-out of the RUN function is spent (when RUN is flashing, by releasing the RUN pushbutton, the program will start).
HLD Lit when program is stopped (HOLD mode).
Flashing when the time-out of the HOLD function is spent (when HOLD is flashing, by releasing the RUN pushbutton, the program will restart).
PRG Lit when the instrument is in programmer mode.
Flashing when the program selected for editing or test is a new program.
% Lit when the lower display shows the control output value.
SEG Lit when a program is running.
Flashing when a new segment has been added to an already existing program.
↗ Lit when the segment in progress is a ramp up.
Flashing slowly when the FAST FORWARD is in progress and it is moving on a ramp up.
Flashing fast when the FAST BACKWARD is in progress and it is moving on a ramp up.
→ Lit when the segment in progress is a soak.
Flashing slowly when the FAST FORWARD is in progress and it is moving on a soak.
Flashing fast when the FAST BACKWARD is in progress and it is moving on a soak.
↘ Lit when the segment in progress is a ramp down.
Flashing slowly when the FAST FORWARD is in progress and it is moving on a ramp down.
Flashing fast when the FAST BACKWARD is in progress and it is moving on a ramp down.
MAN Lit when device is in manual mode.
REM Lit when device is controlled by serial link.
RSP Lit when Set point trim is used (auxiliary linear input).
SPX Lit when a temporary set point, from serial link, is used during controller mode.
1 Lit when OUT 1 is used as control output and it is in ON condition or when Event 1 is activated or when alarm 1 is in alarm state and acknowledged.
Flashes when alarm 1 is in alarm state and it is not acknowledged.
2 Lit when OUT 2 is used as control output and it is in ON condition or when Event 2 is activated or when alarm 2 is in alarm state and acknowledged.

Flashes when alarm 2 is in alarm state and it is not acknowledged.

3 Lit when OUT 3 is used as control output and it is in ON condition or when servomotor output increases or when Event 3 is activated or when alarm 3 is in alarm state and acknowledged.
Flashes when alarm 3 is in alarm state and it is not acknowledged.

4 Lit when OUT 4 is used as control output and it is in ON condition or when servomotor output decreases or when Event 4 is activated or when alarm 4 is in alarm state and acknowledged.
Flashes when alarm 4 is in alarm state and it is not acknowledged.

IN 1 to IN 4 Lit when the related digital input is in ON condition.

OUT 10 to OUT 19 Lit when the related digital output is in ON condition.

DISPLAY FUNCTION DURING PROGRAMMER MODE

When device operates in programmer mode and a program is running.

The upper display shows the process variable (the value will be flashing if device is in WAIT mode) and RUN, PRG and SEG indicators are lit.
We define the above condition as “programmer normal display mode”.
The ↘, → and ↗ indicators lit if the segment in progress is a ramp down, a soak or a ramp up respectively.

When a program starts, the middle display shows:
- the operative set point value, if the segment is a ramp
- the remaining time to end the segment, if the segment is a soak.
  NOTE: if the remaining time is more than 1 hour, it will be shown in hours and minutes, if, the remaining time is less than 1 hour, it will be shown in minutes and seconds.

The lower display shows the running program number on the two most significant digits (MSD) and the number of the segment in progress on the two LSD; the decimal point at the left of the 2 LSD lit.
Pushing FUNC pushbutton it is possible to change the information on the middle and lower displays.

The first FUNC pushbutton pressure modify the middle display indication.
It will show:

- the time remaining to the end of the segment, if the segment in progress is a ramp
- the operative set point, If the segment in progress is a soak.

The next FUNC pushbutton pressure regenerates the initial middle display indication while the lower display indication will be modified as follows:

a) Push the FUNC pusbutton again;
   a.1) if a simple program is running, the lower display shows "r." followed by the number of the cycle necessary to complete the program.
   a.2) if a linked program is running, the lower display shows "L." followed by the number of the cycle necessary to complete the linked program.
b) Push the FUNC pusbutton again; the lower display shows "t.G." followed by the number of the tracking group programmed for the specific segment. The instrument will show 0 if no tracking group is assigned.
c) Push the FUNC pusbutton again; the lower display shows "u." followed by the tracking above value programmed for the specific segment. The instrument will show 0 if no tracking band is assigned.
d) Push the FUNC pusbutton again; the lower display shows "d." followed by the tracking below value programmed for the specific segment. The instrument will show 0 if no tracking band is assigned.
e) Push the FUNC pusbutton again; the lower display shows "P.I.d." followed by the PID group programmed for the specific segment.
f) Push the FUNC pusbutton again; the lower display shows "P." followed by number of the program in progress.
   When the instrument is in stand-by mode, the "P." indication is followed by the program number selected by logic inputs (if programmed and included between 1 and 99) or the last executed program number.
g) Push the FUNC pusbutton again; the lower display shows "F." followed by the number of free segments (segment not used).
h) Push the FUNC pusbutton again; the lower display shows "A." followed by the current consumed by the load under test when the load is in ON condition (see also "OUT failure detection").
i) Push the FUNC pusbutton again; the lower display shows " b." followed by the leakage current running in the load under test when the load is in OFF condition (see also "OUT failure detection").

l) Push the FUNC pusbutton again; the lower display shows " Fd." followed by the OUT failure detection alarm status:
   OF = no alarm
   AL (flashing) = alarm
   AL (steady) = acknowledged alarm

m) Push FUNC push-button again, the lower display will show " ñ." followed by the MAIN control output value in the range 0.0 % (-19.0 % for feedback) to 99.9 % (“ □ □. □ “ shows that the control output is ≥ 100.0 %) or within the scale configured by “ñC.E.L” [C.F09] and “ñC.E.H” [C.F10].
   NOTE: When the MAIN output is a servomotor type, the instrument shows, for this output, the feedback position instead of the output in percent.

n) Push FUNC push-button again, the lower display will show "S." followed by the SECONDARY control output value in the range 0.0 % (-19.0 % for feedback) to 99.9 % (“ □ □. □ “ shows that the control output is ≥ 100.0 %) or within the scale configured by “SC.E.L” [C.F15] and “SC.E.H” [C.F16].
   NOTE: When the secondary output is a servomotor type, the instrument shows, for this output, the feedback position instead of the output in percent.

o) Push FUNC push-button again, the lower display will show the value of the auxiliary input, if configured.

- Pushing FUNC push-button again, the display will come back to the initial indication.

All the visualization are not bound to a time out unless OFD (output failure detection) is in alarm condition and the alarm has not been acknowledged.
In this situation, the instrument forces the indication described at point l) and, if a different indication is required, it restores this indication after time out (see “t.out” [C.I10]).

NOTES:

1) When the auxiliary input is used, the set point value shown by the instrument is equal set point pattern plus the values measured by the auxiliary input (Trim function).
2) The previous informations will be displayed only if the related function has been previously configured.
3) After parameter modification or monitoring, the instrument comes back to the "normal display mode" with, on the lower display, the indication previously selected.
4) The MAN pushbutton allows to go back to the information previously displayed.

When device operates in programmer mode and no program is running (STAND-BY mode).

The upper display shows the process variable and PRG indicator is lit.
The instrument can be in AUTO mode or in MANUAL mode.
When the instrument is in MANUAL mode, the upper display shows the measured value, the middle display shows "ñ." followed by the main power output value and the lower display shows "S." followed by the secondary power output value (for more details see the "MANUAL MODE" paragraph) and PRG and MAN indicators are lit.
When the instrument is in AUTO mode, the upper display shows the measured value, the middle display shows the operative set point, the lower display shows the main power output on the two MSD and the secondary power output on the two LSD; the decimal point between the two indications is flashing.

By pushing the FUNC pushbutton it is possible to select the same indications described at point e, f, g, h, i, l, m and n of the previous paragraph.

OUTPUT POWER OFF FUNCTION during programmer mode
By this mode it is possible to disable the process control.
In this mode, the instrument operate as an indicator and:
- the middle display shows O.P.O.;
- the lower display and the bargraphs are void;
- the time proportional control outputs are set to zero;
- the linear control outputs are set to the initial scale value;
- the servomotor output maintain the same position has prior to the power output mode.
- all alarm are in “NO alarm condition”;
- all the events not related with the end of program or with the Output Power OFF mode are in OFF condition;
- all the logic input status (exception made for RUN/Hold input) are ignored;
- all the analog retransmissions are forced to the initial scale value.

It is possible to program a digital output in order to signal when the instrument is in OPO mode.

When the instrument is turned off in OPO mode, at power up it restart in the same way.

Exiting from O.P.O. mode, the instrument operate as in presence of a power on condition and the alarm masking and the soft start functions will be enabled.

It is possible to activate the O.P.O. mode by:
- serial link
- by keyboard
- automatically at the end of a program execution.

It is possible to exit from O.P.O. mode:
- manually by
  - serial link
  - keyboard
  - logic input (RUN/HOLD selection)
- automatically by Clock function.

Clock calendar
This option allows to obtain an automatic start of the selected program even if the plant is unmanned.
In run time mode it is possible to select the program to start and to set the time and the day of the automatic start.
In run time mode it is also possible to verify the actual time and day of the instrument.
The actual time and day is programmed in configuration mode (group 6).
In configuration mode is also possible to set the start condition.

NOTES:
A) If the program selection is made by logic inputs, three different situations may occur:
   A.1) the selected program exists, the starting program will be the program selected by logic input;
   A.2) the selected program is the program 0 or a program higher 99, the starting program will be the program selected by “Pr.St” [rb.05] parameter;
   A.3) the selected program does not exist but it is between program 1 and 99, no program will start.
B) If a logic input used for RUN/HOLD selection is programmed and the selection is related with the input status, two different situation may occurs:
   B.1) when the start time has due and the logic input is in HOLD condition, the program execution does not start;
   B.2) When the program assigned to the clock start is selected, and a RUN command is generated, the program does not start until the programmed time is reached.

OUT FAILURE DETECTION FUNCTION (OFD)

The device is capable to measure and display:

- the current running in a load driven by a time proportional control output (main or secondary programmable) when the load is energized;
- the leakage current flowing through the load when the load is de-energized.

If the instrument has been correctly set, it generates an alarm when:

- the current running in the load (when the load is energized) is lower than the "A.L.Fd" [r.C14] parameter value (It shows a partial or total break down of the load, the break down of the actuator or a power down due to a protection or a fuse intervention);
- the leakage current (when the load is de-energized) is higher than the "A.H.Fd" [r.C15] parameter value (It shows a short circuit of the actuator).

The "Display function" paragraph describes how to show the two current values.

The fault condition is shown on the lower display by the "Fd.AL" indication ("AL" may be flashing or steady on in accordance with acknowledge condition) and by the status of the assigned output.

If the ON or OFF period is lower than 120 ms, the related measurement couldn't be performed and the instrument will show, flashing, the last measured value.

SERIAL LINK

The device can be connected to a host computer by a serial link. The host can put the device in LOCAL (functions and parameters are controlled via keyboard) or in REMOTE (functions and parameters are controlled via serial link).

The REMOTE status is signalled by the REM LED.

This instrument allows to modify the operative and configuration parameters, via serial link.

The necessary conditions to implement this function are the following:

1) the serial parameters (see Run time group 7) should be properly configured.
2) the device must be in the run time mode.
3) when it is desired to modify configuration parameter, the dip switch V101.3 should be set to "OFF" (configuration parameter enabled)

During configuration parameter downloading the device goes in open loop with all output in OFF state.

At the end of configuration procedure, the device performs an automatic reset and then returns to close loop control.

LAMP TEST
When it is desired to verify the display efficiency, put the instrument in "normal display mode" and push ▼ and MENU push-buttons for more than 5 s.
The instrument will light up, with a 50 % duty cycle, all the LEDs of the display (we define this function "LAMP TEST").
No time out is applied to the LAMP TEST.
When it is desired to come back to the normal display mode, push any push-button.
During the LAMP TEST the instrument continues to control the process.

MANUAL MODE
MANUAL mode can be activated automatically at the end of a program execution or manually when the instrument is in in STAND-BY mode or it operates in controller mode.
It can be accessed:
- by depressing the MAN push-button for more than 1 sec or
- by acting on a logic input configured as "Au.ñA" (auto/manual selection).

The command from keyboard is accepted and executed only if the instrument is in "Normal Display Mode" while the command from logic input is always accepted.

When in MANUAL mode the LED's MAN lights up while the middle display shows "ñ." followed by the main output values (from 0.0 to 99.9%) and the lower display shows "S." followed by the secondary output value (from 0.0 to 99.9%).
When the device is configured with one control output only and this output is “Servo”, the display will show the current valve position.
When the device has two control outputs and one of them is “Servo”, during valve positioning the display will show the final position of the valve and not the current position.
The control output and/or the valve position can be modified by using “▲”and “▼”.

To come back to the AUTO mode, depress “MAN” push-button for more then 1 sec. or toggle the logic input.
The transfer from AUTO to MANUAL is bumpless (this function is not provided if an output value has been selected at configuration parameter “Añ.UL” [C.G04]).
The transfer from MANUAL to AUTO is bumpless or bumpless balanceless (the bumpless feature is not provided if integral action is excluded).
When the instrument operates in controller mode, if transfer from AUTO to MANUAL is performed during the first part of SMART algorithm (TUNE) when returning in AUTO the device will be forced, automatically, in the second part of the SMART algorithm (ADAPTIVE).

At power up the device starts as configured at “St.Fn” [C.G06] configuration parameter.

NOTES:

1) When auto/manual control mode is selected by logic input, at power up the instrument will start in accordance with the logic input status.
   If the logic input status requires the manual mode, the instrument will verify the “St.Fn” [C.G06] parameter setting and if it is equal to "Auto", "ñan" or “Cnd.A” the power output will be set to zero otherwise the power output will be set equal to the last value prior to power shut down.
2) If the instrument is configured for one control output, the control output is a servomotor type (close or open loop) and device starts up in manual mode, the following action may occur:
   2.A) The valve remains in the same position if:
   “St.Fn” [C.G06] = “ñan” or
   “St.Fn” [C.G06] = “Cnd.A” or
   “St.Fn” [C.G06] = “Cnd.b” and “Añ.UL” [C.G04] = “buñ.”
   2.B) The valve will be moved to the value set in “Añ.UL” if “St.Fn” [C.G06] = “Cnd.b” and “Añ.UL” [C.G04] is different from “buñ.”

DIRECT ACCESS TO THE SET POINT

During the “Normal Display Mode” when the device is in controller mode or in stand-by mode, it is possible to access directly to the set point modification.
Pushing ▲ or ▼ for more than 2 s, the set point will begin changing.
The new set point value becomes operative since no push-button has been depressed at the end of 2 s time out.
The direct access to the set point is disabled if the run time group 2 is software protected.

GENERAL NOTES ABOUT PROGRAM EDITING

This instrument allows to create up to 90 simple programs with a free number of segments for each program.
The instrument total capability is equal to 200 segments.
Each simple program coudn't encompass more than 99 segments.
For each segment it is possible to define the status of the outputs programmed as Break event output.

To each program, instead, it is possible to associate up to 14 timer event each one of them is composed of 5 periods.
The time count and the program start together and the status of the output is equal to:

- ON during the first period,
- OFF during the second period,
- ON during the third period,
- OFF during fourth period,
- ON during the fifth period,
- OFF at the end of the fifth (and last) period.

Furthermore, each program can be completed by the "End of cycle" and the "End of profile" indication.

It is also possible to create up to 9 linked programs.
A linked program is a sequence of up to 9 simple programs.

EDIT MODE

By the EDIT mode it is possible to create, modify or delete all the program types.
The EDIT mode is accessible when the instrument is in programmer mode.
During edit mode the instrument performs all the standard control functions.
When no program is running, no time out is applied to the EDIT mode.
If a program editing is made when the instrument is running a program, a 10 or 30 seconds time out (see [C.I10]) is applied to the EDIT mode.
During the EDIT mode, all the informations and notes about "Control parameters protection" (see page 69) and "Control parameters modification" (see pag 69) are still valid.
When it is desired to enter in EDIT mode, select the Group P and push the FUNC pushbutton.

Follows the complete set of EDIT mode parameters
During the EDIT mode, the upper display shows the selected parameter group, the lower display shows the mnemonic code of the selected parameter while the central display shows the value or status assigned to the selected parameter.

Run time group P [r.Axx]
Program editing

Gr. P
AEY
Edit

This group is available when the instrument operates as programmer only.

SE. 1 - Program selection - [r.A01]

Lower display: SE.xx if the selected program is a simple program.
P.L.xx if the selected program is a linked program.
Where xx is the number of segments of the simple program or the number of simple programs used for the linked program.

Ranges: - from 1 to 90 for simple program; after 90
- from L1 to L9 for linked program

NOTES:
1) When the selected program is a new program, the PRG indicator will flash and xx will be equal to 0.
2) If no segment is available, the instrument will show the existing programs only.
3) It is not possible to select a linked program (from L1 to L9) if no simple program is programmed.

t.SOA - Soak time engineering units selection - [r.A02]

This parameter can be modified only when the selected program is not running and it is not a linked program.
Upper display: Pr. xx where xx is the number of the selected program
Range: "hh.ññ" for hours and minutes
"ññ.ss" for minutes and seconds.

t.rAP - Ramp time engineering units selection - [r.A03]

This parameter can be modified only when the selected program is not running and it is not a linked program.
Upper display: Pr. xx where xx is the number of the selected program
Range: "hh.ññ" for hours and minutes
"ññ.ss" for minutes and seconds.
"GrAd" for gradient in digit/hour.

Gr. P

Eb. 1 - Event 1 enabling - [r.A04]

This parameter can be modified only when the selected program is not running, it is not a linked program and output 1 is configured as timer event, break event, end cycle or end profile indicator.

Upper display: Pr. xx where xx is the number of the selected program

Range: "YES" the event 1 is used by the selected program
"no" the event 1 is NOT used by the selected program

NOTE: For Event 2 to Event 4 and for Event 10 to Event 19, the instrument will show on the lower display the respective event number and it will be possible to perform the same setting described for Event 1.

ItSP - Program 1 - initial set point - [r.A05]

This parameter can be modified only when the selected program is not running and it is not a linked program.

Upper display: Pr. xx where xx is the number of the selected program

Range: from rL (set point low limit [rE.12]) to rH set point high limit [rE.13]).
Out of this range the display shows "ñEAS" and the program will use the starting measured value as initial set point value.

F.SP - Program 1 - Segment 1 - final set point - [r.A06]

This parameter can be modified only when the selected program is not running and it is not a linked program.

Upper display: xx.yy where
xx is the number of the selected program
yy is the number of the selected segment

Range: from rL (set point low limit [rE.12]) to rH set point high limit [rE.13]).
Out of this range the display shows "End" and the program will be finished.

NOTES:
1) Setting "End" to the final set point of the first segment of a program, the selected program will be deleted.
2) Setting "End" to the final set point of a segment, all the next segments, if programmed, will be deleted.
3) If no segment is available (all the 200 segments are used), the "End" indication will be automatically forced.
4) It is not possible to delete a program used in a linked program or selected for automatic start.

HH.ññ - Program 1 - Segment 1 - segment duration - [r.A07]

This parameter can be modified only when the selected program is not running, it is not a linked program and "t.rñP" parameter (ramp engineering units [rA.03]) is different from "GrAd".

Upper display: xx.yy where
xx is the number of the selected program
yy is the number of the selected segment

Lower display: "hh.ññ" for hours and minutes
"ññ.ss" for minutes and seconds.

Range: from 00.01 to 99.59

GrAd - Program 1 - Segment 1 - Gradient - [r.A08]

This parameter can be modified only when the selected program is not running, it is not a linked program and "t.rñP" parameter (ramp engineering units [rA.03]) is equal to "GrAd".

Upper display: xx.yy where
xx is the number of the selected program
yy is the number of the selected segment

Range: from 1 to 9999 digit/hour

P.idG - Program 1 - Segment 1 - PID group selection - [r.A09]

This parameter can be modified only when the selected program is not running, it is not a linked program and at least one control output is programmed.

Upper display: xx.yy where
xx is the number of the selected program
yy is the number of the selected segment

Lower display: P.i.d.G

Range: from 0 to 5

NOTE: setting "Pid.G" equal to 0, the instrument will maintain, for this segment, the PID value selected for the previous segment or mode.

trAG - Program 1 - Segment 1 - tracking group selection - [r.A10]

This parameter can be modified only when the selected program is not running, it is not a linked program and at least one control output is programmed.

Upper display: xx.yy where
xx is the number of the selected program
yy is the number of the selected segment

Gr. P

Range: from 0 to 10.
NOTE: setting trK.G equal to 0, the instrument will not use, for this segment, the tracking function.

b.E. 1 - Program 1 - Segment 1 - Break event 1 status - [r.A11]

This parameter can be modified only when the selected program is not running, it is not a linked program, the specific event has been programmed as break event (see "Event 1 function" [CH.09]) and it has been enabled (see "Event 1 enabling" [rA04]).

Upper display: xx.yy where
xx is the number of the selected program.
yy is the number of the selected segment.

Lower display: b.E. zz where zz is the number of the selected break event.

Range: on the specific output (zz output) will be in ON condition during yy segment execution.
OFF the specific output (zz output) will be in OFF condition during yy segment execution.

NOTE 1: For Break event 2 to 4 and for Break event 10 to 19, the instrument will show on the lower display the respective Break event number and it is possible to perform the same setting described for Break event 1 status.
NOTE 2: For all the other segments of the selected program (max 99), the instrument will show the respective number and it is possible to perform the same setting described for "Program 1 - Segment 1" (from F.SP [r.A.06] to b.E.zz [rA.11])

rPt - Number of program 1 repetition - [r.A12]

This parameter can be modified only when the selected program is not running and it is not a linked program.

Upper display: Pr.xx where xx is the number of the selected program

Range: from 0 to 100.
Above this value the display will show "InF" and the program will be endlessly repeated.

Gr. P

b.E.On - Break event reset at the end of program 1 - [r.A13]

This parameter can be modified only when the selected program is not running, it is not a linked program and at least one break event is programmed for the program 1.

Upper display: Pr.xx where xx is the number of the selected program.

Range: YES the break events maintain their status after the end of the program.
NOTE: if a program is aborted, all the break events maintain the status programmed for the last executed segment.

nO all the break events will be reset at the end of program execution.

End - Control type at the end of program 1 - [r.A14]

This parameter can be modified only when the selected program is not running and it is not a linked program.

Upper display: Pr.xx where xx is the number of the selected program

Range: ñout At the end of the program the instrument goes in manual mode with a power output equal to the value programmed with the "control output at the end of the program 1" parameter [r.A15].

ñSP At the end of the program the instrument will continue to control with a set point value equal to the value programmed with the "Set point at the end of the program 1" parameter [r.A16].

OPO At the end of the program the instrument goes in "Output Power OFF" mode

NOTES:

1) If no control output is configured, this parameter will be forced to "ñSP".
2) If, due to a modification of the instrument configuration, the manual function (previously enabled) is disabled and this parameter is set as "ñout", the "Err" indication will be displayed and the program execution will be inhibited.
In order to remove the "Err" indication correct the instrument configuration.

r.OUt - Control output at the end of program 1 - [r.A15]

This parameter can be modified only when the selected program is not running, it is not a linked program and "Control type at the end of the program 1" [r.A14] is equal to ñout.

Upper display: Pr.xx where xx is the number of the selected program

Range: from 0.0 to 100.0 % if device is configured with one control output only.

Gr. P

from -100.0 to 100.0 % if the devices is configured with two control outputs (split range excluded).

n.SP - Set point at the end of program 1 - [r.A16]

This parameter is available only when the selected program is not running, it is not a linked program and "Control type at the end of the program 1" [r.A14] is equal to ñSP.
Upper display: Pr.xx where xx is the number of the selected program
Range: from rL (set point low limit [rE.12]) to rH set point high limit [rE.13]).

n.P Id - PID group at the end of program 1 - [r.A17]

This parameter can be modified only when the selected program is not running, it is not a linked program and at least one control output is configured.
Upper display: Pr.xx where xx is the number of the selected program
Range: from 0 to 5
NOTE: setting ñPID equal to 0, the instrument will maintain the PID values selected for the last program segment.

t. 1.1 - Program 1 - Timer event 1 - Step 1 - [r.A18]

This parameter can be modified only when the selected program is not running, it is not a linked program and the specific timer event is configured.
Upper display: On.h or On.ñ
where
On shows that during the first step the relative output will be in ON condition;
h shows that the time base is expressed in hours and minutes;
ñ shows that the time base is expressed in minutes and seconds.

NOTE: the time base of the timer event is equal to the "soak time eng. unit" selection [r.A02].
Lower display: t.xx.y
where
xx shows the event number
y shows the step number
Range: from 0 to 99.59
Above this value the display will show "End" and this step and all the next steps are deleted and the timed event is ended.

Gr. P

General notes about timer events
Up to 14 timer events can be associate to each program.
Timer events are composed by 5 steps each, during the first step the associated output is in ON status, during the second one it is in OFF status, during the third one it is in ON status and so on.
The time count starts when the program start but it will not be stopped by HOLD or WAIT functions.
At the end of the last programmed step, the associated output will be forced to OFF.
The program end do not stopped the time count.
NOTE 1: For steps 2 to 5 of the timer event 1 the instrument will show on the lower display the respective step number and it is possible to perform the same setting described for step 1.
NOTE 2: For timer event 2 to 4 and for timer event 10 to 19, the instrument will show on the lower display the respective timer event number and it is possible to perform the same setting described for timer event 1.
NOTE 3: The Timer event are not active during linked program execution.
NOTE 4: the simple program editing procedure encompasses all the parameters from "Program selection" [r.A01] to "Program x, timer event y step z" [r.A18].
The linked program editing procedure, instead, encompases only the "Program selection" [r.A01], "Selection of the program to add to the selected linked program" [r.A19] (see below) and "Number of linked program repetition" [r.A20] (see below).

Gr. P

PrG.1 - Selection of the program to add to the selected linked program - [r.A19]

Upper display: PL.Lx where x (from 1 to 9) is the selected linked program.
Lower display: PrGy where y (from 1 to 9) is the position in which the simple program will be added in the linked program.
Range: from 1 to 90 (it is the number of the program to add and the instrument will show only the number of the existing programs) above this value the display shows "End" used for terminate the linked program.

rPt - Number of linked program repetitions - [r.A20]

Upper display: PL.Lx where x (from 1 to 9) is the selected linked program.
Range: from 1 to 100; above this value the display shows "InF" and the linked program will be repeated endlessly.

SIMPLE PROGRAM MANAGEMENT

HOW TO CREATE A SIMPLE PROGRAM

When it is desired to create a new program proceed as follows:
1) select the Group P;
2) select a program number (from 1 to 90);
3) set the initial program parameters (soak and ramp time eng. units, enable the used event and set the initial set point);
4) set the parameter of all segments (final set point, segment duration, the PID group, the tracking group and the status of the used break events);
5) then set the program repetitions;
6) set the instrument behaviour at the end of the program (control type, control output or set point, PID group)
7) set the timer events.

The program is terminated.

NOTES:

1) If the selected program is a new program, the PRG LED will be flashing otherwise it lits steady.
2) When no program is running, no time out is applied to the Group P parameter modification.
   If a program editing is made when the instrument is running a program, a 10 or 30 seconds time out (see [C.I10]) is applied to the Group P parameter modification.
3) For event enabling, the instrument will show only the number of the outputs configured as timer event, break event, end cycle or end profile indicator.
4) When it is desired to end the program, after the last used segment setting, it is sufficent to set "END" for the final set point of the next segment. The instrument will go automatically to the program repetitions parameter.
5) Setting "End" to the final set point of the first segment of a program, the selected program will be deleted.
6) If no segment is available (all the 200 segments are used), the "End" indication will be automatically forced.
7) It is not possible to delete a program used in one or more linked programs.

HOW TO MODIFY A SEGMENT

When it is desired to modify a segment, it is sufficent to:
1) select the Group P;
2) select the desired program;
3) reach the segment to be modify;
4) select the parameter and change its value;
5) Push the FUNC pushbutton;

It is now possible to exit from edit mode.

NOTES:

1) When the final set point of a ramp has been modified and the next segment is a soak, the instrument automatically modifies the final set point of the next segment also.
   In this way, the next segment remain a soak with a set point equal to the new value.
   If the two segments following the ramp are soaks, only the first segment remains a soak, the second one become a ramp with a time duration according to the notes 2, 3 and 4.
2) When, changing a final set point, a soak becomes a ramp or viceversa and the two eng. units are hh.mm and mm.ss or viceversa, the instrument will use the old programmed value with the new time base (for example 10 hours and 30 minutes becomes 10 minutes and 30 second or 45 minutes and 00 second become 45 hours and 0 minutes).
3) When, changing a final set point, a soak becomes a ramp and the ramp eng. units is a gradient, the instrument will multiply the two MSD of the old programmed value (the hours or the minutes according to the selected "Soak time engineering unit") to 60 and than add to the moltiplication result the two LSD (the minutes or the seconds according to the selected "Soak time engineering unit"); the resulting value is used as gradient.
4) When the final set point of a ramp has been modified and the ramp becomes a soak and the eng. unit of the ramp was equal to "GrAd", the instrument sets the soak time of this segment equal to 1 (1 second or 1 minute according to the selected "Soak time engineering unit").

HOW TO ADD A SEGMENT IN AN EXISTING SIMPLE PROGRAM

When it is desired to add a segment to the end of a program, it is sufficent:

1) select the Group P (EDIT mode);
2) select the desired program;
3) reach the last programmed segment;
4) when the instrument displays the final set point of the next segment with the "End" indication, modify this value;
5) set the remaining parameters of the new segment;

It is now possible to exit from edit mode.

When it is desired to add a segment between segment x and segment x+1, proceed as follows:

1) select the Group P (EDIT mode);
2) select the desired program;

3) select the final set point of the segment x+1:
4) push "RUN" + "▲" pushbuttons; the display will show the final set point of the new segment with the "End" indication.
   NOTE: modify this value before to push the FUNC pushbutton otherwise all the following segments will be deleted.
5) set the remaining parameters of the new segment;

It is now possible to exit from edit mode.
For segment addition, the same notes described for segment modification are valid.

HOW TO DELETE A SEGMENT IN AN EXISTING SIMPLE PROGRAM

When it is desired to delete a segment at the end of a program, it is sufficent to:
1) select the Group P (EDIT mode);
2) select the desired program;
3) reach the last programmed segment;
4) when the instrument displays the final set point of the last segment, select the "End" indication and push the FUNC pushbutton.

It is now possible to exit from edit mode.

When it is desired to delete the segment x, proceed as follows:
1) select the Group P (EDIT mode);
2) select the desired program;
3) select the final set point of the segment x;
4) push "RUN" + "▼" pushbuttons; the display will show the final set point of the x + 1 segment.

It is now possible to exit from edit mode.
For segment deleting, the same notes described for segment modification are valid.

HOW TO DELETE AN EXISTING SIMPLE PROGRAM

When it is desired to delete a simple program, it is sufficent to:
1) select the Group P (EDIT mode);
2) select the desired program;
3) reach the first programmed segment;
4) when the instrument displays the final set point of the first segment, select the "End" indication and push the FUNC pushbutton. The display will show the number of the selected program with the PRG LED flashing.
   NOTE: it is not possible do delete a simple program used in one or more linked programs.

It is now possible to exit from edit mode.

LINKED PROGRAM MANAGEMENT

HOW TO CREATE A LINKED PROGRAM

It is possible to create up to 9 linked programs (L1 to L9), each linked program is formed by the union of up to 9 simple programs.
When it is desired to create a linked program proceed as follows:

1) select the Group P (EDIT mode);
2) select a program number (from L 1 to L9)
   NOTE: the L1 indication will be shown after the simple program number 90;
3) select, in sequence, the simple programs to add to the selected linked program;
4) set the program repetitions

The program is ended.

NOTES:

1) If the selected linked program is a new program, the PRG led will be flashing otherwise it is stready lit.
2) When no program is running, no time out is applied to the Group P parameter modification.
   If a program editing is made when the instrument is running a program, a 10 or 30 seconds time out (see [C.I10]) is applied to the Group P parameter modification.
3) When it is desired to end the program, after the last used program number it is sufficent to set "END" for the next simple program. The instrument will go automatically to the linked program repetitions parameter.
4) Setting "End" to the first simple program, the selected linked program will be deleted.
5) If no simple program is available, the instrument do not allows to select any linked program number.
6) At the end of a linked program, the instrument behaviour will be equal to the behaviour programmed for the last simple program of the linked program.
7) During a linked program execution, the timer events are disabled.
8) During a linked program execution, the program repetitions programmed of each simple program will be executed.
9) The "End of cycle" and/or the "End of profile indicator" in relation to the simple programs, if present, are enabled during the linked program execution.
10) When, during a linked program execution, the final set point of a simple program is different from the initial set point of the next simple program, the instrument will do a step transfert from the two set points.

HOW TO MODIFY A LINKED PROGRAM
When it is desired to modify a linked program it is necessary to re-edit it.

HOW TO DELETE AN EXISTING LINKED PROGRAM
When it is desired to delete a simple program, it is sufficent to:
1) select the Group P (EDIT mode);
2) select the desired program;
3) select the first simple program and set the "End" indication, then push the FUNC pushbutton. The display will show the number of the selected program with the PRG LED flashing.

It is now possible to exit from edit mode.

HOW TO CHECK A PROGRAM
At the end of a program creation (simple or linked), it is possible to verify if all the program parameters and the control parameters related to the selected program are correct.
This test may be manually activated by pushing "RUN" + "MAN" pushbuttons.
If the program check is right, the lower display will show "O.K"; push any pushbutton.

If an error is detected, one of the following error messages will be shown on the lower display:

E.A	error on time ramp selection [r.A03]
E.b	error on initial set point [r.A05]
E.c	error on number of program repetitions [r.A12]
E.d	error on control type at the end of the program [r.A14] and on control output at the end of the program [r.A15]
E.E	error on set point at the end of the program [r.A16]
E.F	error on PID group selection at the end of the program [r.A17]
E.G	error on timer events [r.A18]
E.xxh	error on final set point of xx segment [r.A06]
E.xxi	error on xx segment duration [r.A07]
E.xxj	error on xx segment gradient [r.A08]
E.xxk	error in PID group selection of the xx segment [r.A09]
E.xxL	error on tracking group selection of the xx segment [r.A10]
E.yyP	error on yy PID group
E.yyt	error on yy tracking group

If the program check is done on a linked program, an additional error code may be shown:

E.ñ simple program not existing (the central display will show the number of the not existing program).
This message will be shown when a simple program, used in a linked program, has been deleted and a check of the linked program is required.

The program check is automatically made when program start is required.

HOW TO RUN A PROGRAM (simple or linked)
The instrument must be in STAND-BY mode (the PRG LED must be ON and the RUN LED must be OFF).

1) By MENU pushbutton select the Group P parameter
2) Push the FUNC pushbutton. The instrument will show the last selected program.
   NOTE: it is possible to reach directly the Group P program selection parameter by pushing the RUN pushbutton.
   This selection can be made from any other group and from normal display mode.
3) By ▲ and ▼ pushbuttons select the desired program number (from 1 to 90 for simple program, above 90 the instrument shows the linked program from L1 to L9).
   NOTE: for program selection the PRG LED must be lit in steady state. if the PRG LED is flashing, the selected program do not exists.
4) Push the RUN pushbuttons and maintain the pressure until the RUN LED flashes. Releasing the RUN button the program starts and the SEG LED will be turned ON.
   NOTES
   a) the program selection and the RUN function may be made by logic inputs and serial link also.
   b) The program selection by logic input has priority with respect of the manual selection (by keyboard). For this reason, if a program from 1 to 99 is selected by logic inputs, it is impossible to run a program different from it and at RUN pushbutton pressure (or contact closure) the instrument will automatically jump and show the program number selected by logic inputs.
   When it is desired to run a program manually selected, it is necessary to select by the logic inputs a number equal to 0 or higher than 99 (out of program range).
   c) If the selected program do not exist, the RUN pushutton pressure do not produces any effect.
   d) Before program starting, the instrument automatically checks all the parameters related to the selected program and, if an error is detected, the program does not start and

an error message will be shown (for more details about this group of error messages see "How to check a program").

During RUN mode the arrows LED ↘→↗ will show the type of segment (ramp down, soak or ramp up) is in progress.

NOTE 2: when a program starting is required, the ItSP [r.A05] parameter of the selected program is equal to "ñEAS" (the program uses the measured value as initial set point) and an error is detected on the measuring input, the program starts in WAIT mode (see below), the upper display will flash, the central display will show "Err", no arrows LED is lit and the FAST and JUMP functions are disabled.

The program will start only when at least 10 measures has been made correctly.

ACTIONS AVAILABLE DURING RUNNING MODE

When a program is running it is possible:

1) to modify all the run time parameters (see "Run time parameter modification" paragraph);
2) to create or to modify all the programs not running or not part of the running linked program (see "Simple program management" and/or "Linked program management");
3) to automatically stop the program in progress (WAIT);
4) to abort program in progress (ABORT);
5) to manually and temporarily stop the program execution (HOLD);
6) to move forward or backward the executing point of the program 60 time faster than the programmed value (HOLD + FAST);
7) to jump to the beginning of a segment from where it is desired to restart the program (HOLD + JUMP).

WAIT

When the measured value is outside the tracking band programmed for the segment in progress, the instrument automatically stops the time counting of the segment and it waits until the measure value is come back in the tracking band. At this point the time counting restarts.

During the WAIT mode the instrument operates as follows:

1) the upper display is flashing;
2) the instrument continues to control the process using a fixed set point;
3) the time counting of the timer events will not be stopped;
4) all standard functions (like alarms, Output failure detection, etc..) are operative.

When the instrument is in WAIT mode, it is possible:

a) to abort program execution (ABORT);
b) to stop manually and temporarily the program execution (HOLD).

ABORT
This function allows to definitively stop the program in progress. When it is desired to ABORT the program push the RUN pusbutton and maintain the pressure until the RUN LED will be turned OFF.
NOTE: the ABORT function can be activated from any condition (wait, hold, etc..).
After an abort, the instrument comes back in "normal display mode and in STAND-BY mode using all the parameters (PID group, action, etc.) programmed for the STAND-BY mode "at the end of the selected program".

HOLD
This function manually and temporarily stops the program in progress.
To enable the HOLD mode proceed as follows:
The instrument is in programmer mode and in RUN mode (the RUN LED is lit).
Push the RUN pushbutton until the HLD LED starts to flash. When the button has been released, the program stops.

During the HOLD mode the instrument operates as follows:
1) HLD LED is lit;
2) the instrument continues to control the process using a fixed set point;
3) the time count of the timer events will not be stopped;
4) all standard functions (like alarms, Output failure detection, etc..) are operative.

When the instrument is in HOLD mode, it is possible:
a) to modify all the run time parameters (see "Run time parameter modification" paragraph);
b) to create or to modify all the programs not running or not part of the running linked program (see "Simple program management" and/or "Linked program management");
c) to abort the program execution (ABORT);
d) to move forward or backward the executing point of the program 60 time fast than the programmed value (HOLD + FAST);
e) to jump to the beginning of a segment from where it is desired to restart the program (HOLD + JUMP).

FAST
This function allows to move, forward or backward, the point of the program in progress 60 time faster than the programmed value.
When it is desired to activate the FAST function, proceed as follows:
1) Put the instrument in HOLD mode.
2) Push for more than 3 seconds the ▲ or ▼ pushbutton (fast forward or backward respectively).
   The value on the central display will change and the istrument will carry out, forward or backward, the segment in progress 60 time fast than the programmed value.
3) Relase the button. The FAST function will continue to scroll the segment.
   The scrolling will be automatically stopped when:
   - a fast forward action is in progress and the instrument reaches the beginning of the next segment;
   - a fast backward action is in progress and the instrument reaches the end of the previous segment.
4) Push the button again, the FAST function restarts on the next segment.
5) When the desired point has been reached, push the ▲ or ▼ pushbutton and the scrolling will be stopped.
6) Restart the program.

NOTES:
1) When the FAST function is activated, the central display will show the same indication described for the RUN mode.
2) When the FAST function is activated, the instrument modifies the power output in accordance with the actual set point value.

JUMP
This function allows jump, forward or backward, to the beginning or to the end of the segments.
When it is desired to activate the JUMP function, proceed as follows:
1) Put the instrument in HOLD mode.
2) Push the ▲ + MAN or ▼ + MAN pushbuttons (JUMP forward or backward respectively).
   The instrument will jump automatically:
   - to the beginning of the next segment if a jump forward action has been required;
   - to the end of the previous segment if a jump backward action has been required;
3) Push the two buttons again to reach the beginning of the next segment and so on.

4) When the desired point has been reached, restart the program.

NOTES:

1) When the JUMP function is activated, the central display will show the same indication described for the RUN mode.
2) When the JUMP function is activated, the instrument modifies the power output in accordance with the actual set point value

CONTOLLER MODE

During Controller mode the instrument operates as a standard controller.
When it is desired to set the instrument in controller mode proceed as follows:
1) put the instrument in STAND BY mode;
2) select the run time parameter group 2;
3) Select the "PrG" [r.B01] parameter and set NO;
4) push the FUNC pushbutton.
The PRG LED will be turned OFF.
When the instrument operates as controller all the break or timer event outputs are deactivated and the run time parameter group P and group 9 are not available while the SP parameter is available.
When the transfert from programmer mode to controller mode is required, the instrument will maintain the same PID parameters used in STAND-BY mode.
During the controller mode, the standard features like alarms, output failure detection function, serial link, manual mode and lamp test are operative.
When the instrument operates in controller mode it is also available the SMART function (self tuning of control parameters).

DISPLAY FUNCTION DURING CONTROLLER MODE
When device is powered and it is operating in automatic mode, the upper display shows the process variable and the middle display shows the set point value (final or operative according to “SP.dS” [C.I07] parameter setting).
NOTE: when the auxiliary input is used, the set point value shown by the instrument is equal SP parameter value plus the values measured by the auxiliary input (Trim function).
We define the above condition as “normal display mode”.

The lower display will show:
a) at instrument start up, the control output value (the % LED is lighted).
NOTES:
In accordance with the configured output type, the control output can be displayed in the following ways:
a.1) If the device is configured with servomotor control drive only, the feedback position value is displayed in the range -19.0 % to 120.0 % (the display is blank if open loop servomotor without valve position indication has been programmed)
a.2) If the device is configured with one control output (linear or time proportional), the control output value is displayed in the range 0 % to 100 %.
a.3) if the device is configured with two control outputs the value of the MAIN output is shown on the two most significant digits while the value of the SECONDARY output is shown on the two less significant digits.
The decimal point between the two values will be flashing.
NOTE: the graphic symbol “ □ □ “ shows that the specific control output is ≥ 100%.
Whenever one of the two outputs is a servomotor type, the instrument shows, for this output, the feedback position (in the range from -19 % to 99 %) instead of the output in percent.

b) push the FUNC push-button; the lower display will show " A." followed by the current consumed by the load under test when the load is in ON condition (see also "OUT failure detection").
c) Push FUNC push-button again, the lower display will show " b." followed by the leakage current running in the load under test when the load is in OFF condition (see also "OUT failure detection").
d) Push FUNC push-button again, the lower display will show " Fd." followed by the OUT failure detection alarm status:
OF = no alarm
AL (flashing) = alarm
AL (steady) = acknowledged alarm
e) Push FUNC push-button again, the lower display will show " ñ." followed by the MAIN control output value in the range

0.0 % to 99.9 % or a value within the scale configured by “ñC.E.L” [C.F09] and “ñC.E.H” [C.F10] when a scaled readout is applied to the main output.
The instrument will show “ □ □. □ “ when the control output is ≥ 100.0 %.
NOTE: When the MAIN output is a servomotor type, the instrument shows, for this output, the feedback position (in the range from -19.0 % to 99.9 %) instead of the output in percent.

f) Push FUNC push-button again, the lower display will show "S." followed by the SECONDARY control output value in the range 0.0 % to 99.9 % or within the scale configured by “SC.E.L” [C.F15] and “SC.E.H” [C.F16].
The instrument will show “ □ □. □ “ when the control output is ≥ 100.0 %.
NOTE: When the secondary output is a servomotor type, the instrument shows, for this output, the feedback position (in the range from -19.0 % to 99.9 %) instead of the output in percent.

g) Push FUNC push-button again, the lower display will show the value of the auxiliary input, if configured.

- Pushing FUNC push-button again, the display will come back to the control output value indication.

All the seven types of visualization are not bound to a time out unless OFD (output failure detection) is in the not acknowledged alarm condition.
In this situation, the instrument forces the indication described at point d) and, if a different indication is required, it restores this indication after time out (see “t.out” [C.I10]).

NOTES:

1) The previous informations will be displayed only if the related function has been previously configured.
2) After parameter modification or monitoring, the instrument comes back to the "normal display mode" with, on the lower display, the indication previously selected.

INDICATORS function during controller mode

°C Lit when process variable is in Celsius degrees.
°F Lit when process variable is in Fahrenheit degrees.
ST Flashing when the first step of SMART algorithm is activated.
Lit when the second step of SMART algorithm is activated.
% Lit when the lower display shows the control output value.
MAN Lit when device is in manual mode.
REM Lit when device is controlled by serial link.
RSP Lit when Set point trim (auxiliary input) is used.
SPX Lit when a temporary set point, from serial link, is used.
1 Lit when OUT 1 is used as control output and it is in ON condition or when Event 1 is activated or when alarm 1 is in alarm state and acknowledged.
Flashes when alarm 1 is in alarm state and it is not acknowledged.
2 Lit when OUT 2 is used as control output and it is in ON condition or when Event 2 is activated or when alarm 2 is in alarm state and acknowledged.
Flashes when alarm 2 is in alarm state and it is not acknowledged.
3 Lit when OUT 3 is used as control output and it is in ON condition or when servomotor output increases or when Event 3 is activated or when alarm 3 is in alarm state and acknowledged.
Flashes when alarm 3 is in alarm state and it is not acknowledged.
4 Lit when OUT 4 is used as control output and it is in ON condition or when servomotor output decreases or when Event 4 is activated or when alarm 4 is in alarm state and acknowledged.
Flashes when alarm 4 is in alarm state and it is not acknowledged.

DIRECT ACCESS TO THE SET POINT

When the device works as controller in AUTO mode and it is in “Normal Display Mode”, it is possible to access directly to the set point modification.
Pushing ▲ or ▼ for more than 2 s, the set point will begin changing.
The new set point value becomes operative since no push-button has been depressed at the end of 2 s time out.
The direct access to the set point is disabled if the run time group 1 is software protected.

SMART FUNCTION

It is used to automatically optimize the control action.
To enable the SMART function proceed as follows:

1) push the MENU push-button until "Gr. 2" run time parameter group is shown.
2) push the FUNC push-button until "Sñrt" parameter is shown.
3) push ▲ or ▼ and set the "On" indication on the middle display;
4) push the FUNC push-button.

The ST LED is flashing during the first part of SMART algorithm (TUNE) while it is stready lit during the second one (ADAP-TIVE).
When the smart function is enabled, it is possible to display but not to modify the control parameters.
To disable the SMART function proceed as follows:

1) push the MENU push-button until "Gr. 2" run time parameter group is shown.
2) push the FUNC push-button until "Sñrt" parameter is shown.
3) push ▲ or ▼ and set the "OFF" indication on the middle display;
4) push the FUNC push-button.

The ST LED will turn off.
The instrument maintains the current set of control parameters and it enables parameter modification.

NOTES:

1) When ON/OFF control is programmed (Pb=0), the SMART function is disabled.
2) The SMART enabling/disabling can be protected by safety key.

OUTPUT POWER OFF FUNCTION during controller mode

By this mode it is possible to disable the process control.
In this mode, the instrument operate as an indicator and:

- the middle display shows O.P.O.;
- the lower display and the bargraphs are void;
- the time proportional control outputs are set to zero;
- the linear control outputs are set to the initial scale value;
- the servomotor output maintain the same position has prior to the power output mode.
- all alarms are in “NO alarm condition”;
- all the events not related with the end of program or with the Output Power OFF mode are in OFF condition;
- all the logic input status are ignored;
- all the analog retransmissions are forced to the initial scale value.

It is possible to program a digital output (event) in order to signal when the instrument is in OPO mode.

When the instrument is turned off in OPO mode, at power up it restarts in the same way.
Exiting from O.P.O. mode, the instrument operates as in presence of a power on condition and the alarm masking and the soft start functions will be enabled.
It is possible to activate/deactivate the O.P.O. mode by keyboard or by serial link .

ERROR MESSAGES

OVERRANGE, UNDERRANGE AND SENSOR LEADS BREAK DETECTION

ON THE MAIN INPUT

The device is capable to detect a fault condition on the main input (OVERRANGE or UNDERRANGE or SENSOR LEADS BREAK).
When the process variable exceeds the full scale value programmed by "ñ.In.t" [C.d02], an OVERRANGE condition will be shown on the upper display as show in the following figure:

When the process variable is lower than the initial scale value programmed by "ñ.In.t" [C.d02], an UNDERRANGE condition will be shown on the upper display as show in the following figure:

In presence of an main input out-of-range condition, the control outputs operate as follows:

a) When “SF.Cn” [C.G09] is set to “Std.”:
   a.1) An OVERRANGE is detected and
      - the device is set for one control output only, the output will be forced to 0 % (if reverse action is programmed) or to 100% (if direct action is programmed).
      - the device has two control outputs, the “Main” output is forced to 0 % and “Secondary” output is forced to 100%.
   a.2) An UNDERRANGE is detected and
      - the device is set for one output only, the output is forced to 100 % (if reverse action is programmed) or to 0 % (if direct action is programmed).
      - the device has two control outputs, the “Main” output is forced to 100 % and “Secondary” output is forced to 0 %

b) With “SF.Cn” [C.G09] set to “Ov.Un”, when an overrange or an underrange condition is detected, the power output is forced to the safety value “SF.UL” [C.G10].

c) When “SF.Cn” [C.G09] is set to “OvEr”
   c.1) if an overrange condition is detected, the power output is forced to the safety value “SF.UL” [C.G10]
   c.2) if an underrange condition is detected the instrument will operate as described at point a.2).

d) When “SF.Cn” [C.G09] is set to “Undr”
   d.1) if an underrange condition is detected, the power output is forced to the safety value “SF.UL” [C.G10]
   d.2) if an overrange condition is detected the instrument will operate as described at point a.1).

NOTE: IN ALL CASES ABOVE DESCRIBED THE OUTPUTS WILL BE FURTHER INFLUENCED BY “OUTPUT CONDITIONING”

When servomotor open loop is configured, the “Condition for output safety value” ("SF.Cn [C.G09]) acts as described below:

1) When “SF.Cn” [C.G09] is set to “Cnd.A” and an overrange or an underrange condition is detected, the servomotor is driven to its high limit position (OUT 3 “▲” will be maintained closed).

2) With “SF.Cn” [C.G09] is set to “Cnd.b” and an overrange or an underrange condition is detected, the servomotor is driven to its low limit position (OUT 4 “▼” will be maintained closed).

3) When “SF.Cn” [C.G09] is set to “Cnd.C” the out-of-range condition acts on the control output as the complement of effect described at point a).

These instruments are capable to detect, on the main input, the sensor leads break condition.
When the sensor leads break condition is detected, the instrument shows “OPEn” on the upper display.
Note: On the linear input the leads break can be detected only for 4-20 mA, 1-5 V, 2-10 V, 0-60mV and 12-60 mV ranges.

In addition, on RTD input a special test is provided to signal “Shrt” when input resistance is less than 12 Ω (Short circuit sensor detection).

When a fault condition different from overrange or underrange is detected on the main input, the alarms,the power output and the analog retransmissions operate as in presence of an overrange condition.

NOTE: if, when a program is running, a fault condition on the main input is detected, it has no effect on the program execution and on the timer events.

ON THE AUXILIARY INPUT
When the remote set point trim signal exceeds the full scale value programmed by "A.In.t" [C.d10], an OVERRANGE condition will be shown on the lower display as shown in the following figure:

When the remote set point signal is lower than the initial scale value programmed by "A.In.t" [C.d10], an UNDERRANGE condition will be shown on the lower display as show in the following figure:

These instruments are capable to detect, on the auxiliary input, the sensor leads break condition.
When the sensor leads break condition is detected, the instrument shows “OPEn” on the lower display.
NOTE: the leads break condition can be detected only if the selected range has a zero elevation (4/20 mA or 1/5 V or 2/10 V).
NOTES:
1) The fault conditions on the auxiliary input will be displayed only if the related indication has been selected (see "Display function" at pages 106 and 132).
2) When a fault condition different from overrange or underrange is detected on the auxiliary input, the alarms, the power output and the analog retransmissions operate as in presence of an underrange condition.

OTHER
The device is also capable to detect an RJ error (E.502), an internal auto-zero error (E.500) and an internal zero integrator measurement error (E.501).
When a fault condition different from overrange or underrange is detected, the instrument (alarms, power output, analog retransmissions etc.) operate as in presence of an overrange condition.

ERROR MESSAGES

At the end of each configuration parameter group modification the instrument checks the new parameters values.
At instrument start up in operative mode, all the parameters are checked.

If an error is detected, the instrument will show:
- on the upper display,
  the parameter family
  CnF.x for configuration parameters
  Gr. x for run time parameters
  CAL for calibration parameters
  where x is the number of the specific group where the error has been detected.
- on the middle display, the "Err" indication
- on the lower display,
  - for configuration or run time parameter, it will show the mnemonic code of the group with the wrong parameter setting.
  - for calibration parameter, it will show the mnemonic code of the wrong calibration parameter.

The device resets automatically after a time out of 6 s (20 s if serial link is enabled)

Configuration and run time parameter errors.
When one of this error is detected, following the procedures described for standard parameter modification, reach the group with the wrong parameter setting and correct it (every keystroke restarts the time out. The time out is disabled when modify configuration parameters mode is enabled)
When the error is corrected push “MENU” until the device resets (if in run mode) or end the modify configuration parameters mode following the normal procedure.
Repeat the above described procedure if another error is shown.

Feedback potentiometer adjustment error
If this error is detected (span less than 20% of complete potentiometer travel) push any key to load default calibration parameters
Then remake the calibration following the normal procedure (see Gr.8 [r.Hxx]).

Calibration parameter errors

The instrument will show on the lower display one of the following indications:

ñ.I.tc = main thermocouple input calibration error
ñ.I.CJ = cold junction compensation error
ñ.I.rt = main RTD input calibration error
ñ.I.ñA = main mA input calibration error
ñ.I.5 = main 5V input calibration error
ñ.I.10 = main 10 V input calibration error
A.I.ñA = auxiliary mA input calibration error
A.I.5 = auxiliary 5V input calibration error
A.I.10 = auxiliary 10 V input calibration error
In.Ct = current transformer input calibration error
FEEd = electrical feedback input calibration error
05.ñA = output 5 mA calibration error
06.ñA = output 6 mA calibration error

When one of these errors is detected, contact your supplier.

Other errors

When during a program execution, a power failure occurs, at power up the instrument displays this situation showing on the upper display "E.600" indication.
Push one pusbutton to delete the "E.600" indication.

The instrument is also capable to detect the following errors:

E.100 Error during data saving in FRAM
E.110 Error in FRAM handling
E.500 Error during auto-zero measurement
E.501 Error during zero integrator measurement
E.502 Error during reference junction measurement. NOTE: this error may be generated by an ambient temperature higher than 70 °C (158 °F) or lower than -20 °C (-4 °F).

When one of these errors is detected, contact your supplier.

Two errors, related with the preliminary hardware setting, are detectable:

3. wrong position of the V301 dip switch.
8. wrong position of the V101 dip switch.

When one of these error is detected, the display blanks and the error code is shown on most significant digit of the upper display.
Remake V101 or V301 setting.

GENERAL INFORMATIONS

GENERAL SPECIFICATIONS

Case: Polycarbonate black color; self-extinguishing degree: V-0 according to UL 746C.
Front protection: designed and tested for IP 65 (*) and NEMA 4X (*) for indoor locations (when panel gasket is installed).
(*) Test were performed in accordance with IEC 529,CEI 70-1 and NEMA 250-1991 STD.
Installation: panel mounting.
Rear terminal block: 32 screw terminals for 25E model and 54 screw terminals for 25Q (screw M3, for cables from ϕ 0.25 to ϕ 2.5 mm^2 or from AWG 22 to AWG 14) with connections diagram and safety rear cover.
Dimensions: according to DIN 43700
- 48 x 96 mm, depth 128 mm for 25E model.
- 96 x 96 mm, depth 128 mm for 25Q model.

Weight: 500 g for 25E model.
700 g for 25Q model.
Power supply:
- from 100 V to 240 V AC 50/60 Hz (-15% to + 10% of the nominal value).
- 24 V AC/DC ($\pm$ 10 % of the nominal value).

Power consumption:
- 16 VA max. for 25E model
- 20 VA max for 25Q model

Dielectric strength: 2300 V rms according to EN 61010-1.
Display updating time: 500 ms.
Sampling time: 125 ms for linear inputs
250 ms for TC and RTD inputs.
Resolution: 30000 counts.
Accuracy: $\pm$ 0,2% f.s.v. $\pm$ 1 digit @ 25 °C ambient temperature and nominal power supply voltage.
NOTE: for TC type B the accuracy is guaranteed for temperature higher than 500 °C (950 °F).
Common mode rejection: 120 dB @ 50/60 Hz.
Normal mode rejection: 60 dB @ 50/60 Hz.
Electromagnetic compatibility and safety requirements:
This instrument is marked CE.
Therefore, it is conforming to council directives 89/336/EEC (reference harmonized standard EN 50081-2 and EN 50082-2) and to council directives 73/23/EEC and 93/68/EEC (reference harmonized standard EN 61010-1).
Installation category: II

Temperature drift: (CJ excluded)
< 200 ppm/°C of span for mV and TC ranges 3, 4, 7, 18, 19, 22.
< 300 ppm/°C of span for mA/V
< 250 ppm/°C of span for TC range 1, 2, 5, 6, 8, 9, 10, 14, 16, 17, 20, 21, 23, 24, 25, 29.
< 350 ppm/°C of span TC ranges 11, 12, 13, 26, 27, 28.
< 500 ppm/°C of span for RTD.
Operative temperature: from 0 to 50 °C (+32 to 122 °F).
Storage temperature: -20 to +70 °C (-4 to 158 °F)
Humidity: from 20 % to 85% RH, non condensing.

INPUTS

A) THERMOCOUPLE

Type: J, K, T, E, N, S, R, B, L, U, G, D, C, Ni/Ni 18% Mo. °C/°F selectable.
External resistance: 100 Ω max, maximum error 0,1% of span.
Cold junction: automatic compensation from 0 to 50 °C.
Cold junction accuracy : 0.1 °C/°C
Input impedance: > 1 MΩ
Calibration : according to IEC 584-1 and DIN 43710 - 1977.

T/C type	Ranges			
L	1	-100 / 900	°C	DIN 43710-1977
J	2	-100 / 1000	°C	IEC 584-1
K	3	-100 / 1370	°C	IEC 584-1
T	4	-200 / 400	°C	IEC 584-1
U	5	-200 / 600	°C	DIN 43710-1977
E	6	-100 / 800	°C	IEC 584-1
N	7	-100 / 1400	°C	IEC 584-1
S	8	- 50 / 1760	°C	IEC 584-1
R	9	- 50 / 1760	°C	IEC 584-1
B	10	0 / 1820	°C	IEC 584-1
G	11	0 / 2300	°C	
D	12	0 / 2300	°C	
C	13	0 / 2300	°C	
Ni	14	0 / 1100	°C	
L	16	-150 / 1650	°F	DIN 43710-1977
J	17	-150 / 1830	°F	IEC 584-1
K	18	-150 / 2500	°F	IEC 584-1
T	19	-330 / 750	°F	IEC 584-1
U	20	-330 / 1110	°F	DIN 43710-1977
E	21	-150 / 1470	°F	IEC 584-1

T/C type	Ranges		
N	22	-150 / 2550 °F	IEC 584-1
S	23	- 60 / 3200 °F	IEC 584-1
R	24	- 60 / 3200 °F	IEC 584-1
B	25	32 / 3300 °F	IEC 584-1
G	26	0 / 4170 °F	
D	27	0 / 4170 °F	
C	28	0 / 4170 °F	
Ni	29	0 / 2000 °F	

B) RTD (**R**esistance **T**emperature **D**etector)
Input: for RTD Pt 100 Ω, 3-wire connection;
°C/°F selectable.
Measuring current: 140 μA typical.
Line resistance: automatic compensation up to 20 Ω/wire with no measurable error.
STANDARD RANGES TABLE

Input type	Ranges	
RTD Pt 100 Ω	15	- 200 / + 850 °C
IEC 571	30	- 330 / + 1560 °F

C) LINEAR INPUTS
Read-out: keyboard programmable between -1999 and +9999.
Decimal point: programmable in any position
STANDARD RANGES TABLE

Input type		impedance
37	**0 - 60 mV**	> 1 MΩ
38	**12 - 60 mV**	
31	**0 - 20 mA**	< 5 Ω
32	**4 - 20 mA**	
33	**0 - 5 V**	> 200 kΩ
34	**1 - 5 V**	
35	**0 - 10 V**	> 400 kΩ
36	**2 - 10 V**	

AUXILIARY INPUT
Type: NOT isolated linear input.
Function: used as bias on the local set point.
Read-out: keyboard programmable between -1999 and +9999.
Temperature drift: < 300 ppm.
Sampling time: 500 ms.

STANDARD RANGES TABLE

Input type	impedance	Accuracy
0 - 20 mA	< 5 Ω	0.2 % ± 1 digit @ 25°C
4 - 20 mA		
0 - 5 V	> 200 kΩ	
1 - 5 V		
0 - 10 V	> 400 kΩ	
2 - 10 V		

LOGIC INPUTS
The instrument may be supplied with 11 logic inputs programmable as:
- Program selection
- RUN/HOLD mode selection
- ABORT function activation
- Auto/manual selection
- Output limiter activation
- Manual reset of the alarms (acknowledge)
- Reverse/direct control action

Input type: Contact closure (voltage free).
Active logic level: Close or open programmable.
Contact rating: 5 V DC, 2.5 mA

CURRENT TRANSFORMER INPUT FOR OUT FAILURE DETECTION
The instruments equipped with this feature are capable, by means of a CT, to detect and signal a possible failure of the line driven by a control output programmed as a time proportioning output (see "OUT failure detection").
Input range: 50 mA AC.
Scaling: programmable from 10 A to 100 A (with 1 A step).
Resolution:
- for full scale up to 25 A: 0.1 A.
- for full scale from 26 A to 100 A: 1 A

Minimum duration of the period (ON or OFF) to perform the measurement: 120 ms.

CONTROL ACTIONS
Algorithm: PID + SMART
Types:
- one control output (digital or analog output)
- one control output splitted on two outputs.
- two control outputs

NOTE: the outputs can be freely selected among analog, digital or servo outputs.
Digital output types:
Relay, SSR or TRIAC.
Digital output action type:
Proportional time
Analog output types: 20 mA.
Servomotor output:
Two relays with interlocked contact
Servomotor output type:
- Close loop
- Open loop with valve position indication
- Open loop.

PID group: this instrument allows to set up to 5 PID group. It is possible to assign one PID group to each program segment.

Proportional Band: programmable from 0.5% to 999.0% of the input span.
Setting a PB equal to 0 the control action becomes ON/OFF.
Hysteresis (for ON/OFF control action): programmable from 0.1% to 10.0 % of the input span.
Integral time: programmable from 1 second to 20 minutes or excluded.
Derivative time: programmable from 1 second to 10 minutes or excluded.
Integral pre-load: programmable
- for one control output, from 0 to 100% of the output range.
- for two control outputs (split range excluded), from -100 % to +100 % of the output range.

Anti reset windup: from 10 % to 200 % of the input span.
Main output cycle time: from 1 second to 200 seconds.
Secondary output cycle time: from 1 second to 200 seconds.
Relative secondary output gain: keyboard programmable from 0.20 to 2.00 referred to the proportional band.
Overlap / dead band : keyboard programmable from - 20 % (dead band) to + 50 % (overlap) of the proportional band.

Output limiters.
For the main and/or secondary control outputs it is possible to set:
- output high limits
- output low limits
- output max. rate of rise.

AUTO/MANUAL mode: selectable by front push-button or logic input.

OUTPUTS

Control output updating time :
- 125 ms when a linear input is selected
- 250 ms when a TC or RTD input is selected.

Action: direct/reverse programmable
Output level limiter:
- high and low limits for main control output
- high and low limits for secondary control output.

Out 1 and 2
Function: singularly programmable as
- Control output
- Alarm output
- Event output.

Type: Relay, SSR or TRIAC.

Out 1 and 2 - Relay
Relay type: SPDT
Contact rating: 3 A @ 250 V on resistive load.

Out 1 and 2 - SSR
Type: not isolated voltage output
- Logic level 1:
  14V @ 20 mA max.
  24 V @ 1 mA.
- Logic level 0:
  < 0.5 V D.C.

Out 1 and 2 - TRIAC
Switching mode: isolated zero crossing type.
Rated current: from 50 mA to 1 A.
Rated voltage: from 24 V_{RMS} to 240 V_{RMS} -10% +15% (50-60 Hz).
Load type: resistive load only
I^2t for external fuse: 128

Out 3 and 4
Function: singularly programmable as:
- Control output
- Alarm output
- Event output.
- Servomotor drive (Out 3 ▲, out 4 ▼)

Type: Relay .
Relay type: SPST
Contact rating: 3 A @ 250 V on resistive load.
Notes:
1) The commons of the out 3 and 4 are connected together with the same rear terminal.
2) When OUT 3 and 4 are used as independent relay outputs the addition of the two currents must not exceed 3 A.

Servomotor output
Type: Two relays with interlocked contact (Out 3 and 4).
Servomotor output type:
- Close loop
- Open loop with valve position indication
- Open loop.

Feedback potentiometer input: from 100 Ω to 10 kΩ.
Servomotor travel time: From 12 s to 3 minutes.
Servomotor dead band: From 1 % to 50 % of the feedback span or of the valve travel time.
Analog outputs

Out 5 and 6
Function: Programmable as
- Control output
- Analog retransmission of the measured value
- Analog retransmission of the operative set point.

Output type: Isolated output programmable as
- 0-20 mA
- 4-20 mA.

Scaling: programmable from -1999 to 9999.
Maximum load: 600 Ω.
Accuracy:
- 0.1 % when it is used as control output
- 0.05 % when it is used as analog retransmission. **Note**: a too little range scaling can deteriorate the output accuracy.

Filter: It is possible to apply a first order digital filter on the retransmitted value.
The time constant of the filter may be programmed within 0 and 8 s.

Additional 5 + 5 outputs (OUT10 to 19)
Function: singularly programmable as Event output.
Type: Relay .
Relay type: SPST
Contact rating: 0.5 A @ 250 V on resistive load.
Note: The commons of the out 10 to 14 connected together with the terminal 66 while the commons of the output 15 to 19 are connected with terminal 55.

ALARMS
Alarm action: direct or reverse function programmable.
Alarm functions: each alarm can be configured as process alarm, band alarm, deviation alarm, alarm on main or secondary control output value.
Alarm reset: automatic or manual reset programmable on each alarm.
Alarm masking: each alarm can be configured as masked alarm or standard alarm.
This function allows to delete false indication at instrument start up and after a set point change.

Process alarm:
Operative mode: Minimum or maximum programmable.
Threshold: programmable in engineering unit within the input range.
Hysteresis: programmable in engineering units from 1 to 200 digits.
Band alarm
Operative mode: Inside or outside programmable.
Threshold: two thresholds programmable:
- Low - from 0 to -1000 digits.
- High - from 0 to +1000 digits.

Hysteresis: programmable in engineering units from 1 to 200 digits.

Deviation alarm
Operative mode: High or low programmable.
Threshold: programmable from - 1000 to +1000 digits.
Hysteresis: programmable in engineering units from 1 to 200 digits.

Alarm on the main output value
It is possible to obtain an alarm condition when the main control output is lower or higher than a programmed value.
Operative mode: Minimum or maximum programmable.
Threshold: programmable from 0.1 to 100.0 % of the output.
Hysteresis: programmable from 0.1 to 20.0 %.

Alarm on the secondary output value
It is possible to obtain an alarm condition when the secondary control output is lower or higher than a programmed value.
Operative mode: Minimum or maximum programmable.
Threshold: programmable from 0.1 to 100.0 % of the output.
Hysteresis: programmable from 0.1 to 20.0 %.

EVENTS
All the 14 digital outputs are programmable as events.
In this case they are used as:
- Break events
- Timer events
- Output Power OFF annunciator
- End of cycle indicator
- End of profile indicator
- RUN indicator
- WAIT indicator
- Error condition on the main input (overrange, underrange, open or short circuit).
- Error condition on the auxiliary input.
- Error condition on both inputs.
- Auto/Man mode annunciator
- Hold annunciator

AUXILIARY POWER SUPPLY
Type: 24 V DC ± 20% not isolated.
Max. current: 25 mA.

SERIAL INTERFACE
Types: RS 485 isolated
Protocol type: MODBUS, JBUS.
Baud rate: programmable from 600 to 19200 BAUD.
Byte format: 8 bit.
Parity: even, odd or none programmable.
Stop bit: one.
Address: from 1 to 255.
Output voltage levels: according to EIA standard.
NOTE: The EIA standard establishes that by RS-485 interface it is possible to connect up to 30 devices with one remote master unit.
The serial interface of these instruments is based on “High input impedance” transceivers; this solution allows you to connect up to 127 devices (based on the same transceiver type) with one remote master unit.

MAINTENANCE
1) REMOVE POWER FROM THE POWER SUPPLY TERMINALS AND FROM RELAY OUTPUT TERMINALS
2) Remove the instrument from case.
3) Using a vacuum cleaner or a compressed air jet (max. 3 kg/cm^2) remove all deposit of dust and dirt which may be present on the louvres and on the internal circuits trying to be careful for not damage the electronic components.
4) To clean external plastic or rubber parts use only a cloth moistened with:
   - Ethyl Alcohol (pure or denatured) [C_2H_5OH] or
   - Isopropil Alcohol (pure or denatured) [$(CH_3)_2CHOH$] or
   - Water (H_2O)
5) Verify that there are no loose terminals.
6) Before re-inserting the instrument in its case, be sure that it is perfectly dry.
7) re-insert the instrument and turn it ON.

DEFAULT PARAMETERS

General notes:
A complete and consistent set of run time and configuration parameters is memorized in the instrument. These data are the typical values loaded in the instrument prior to shipment from factory.
With these instruments it is also possible to save the user run time and configuration parameters setting and load them again when necessary (for more details see "Default configuration and user parameters" at pag. A.6).

DEFAULT RUN TIME PARAMETERS

This instrument allows to load the default value of a single run time parameter group or to load all the run time parameters (exception made for "Run time group 8" [r.Hxx] and "Run time group P").

A) When it is desired to load the default parameter of a single group, proceed as follows:
   A.1) By MENU pushbutton, select the desired run time parameter group.
   A.2) By FUNC pushbutton, select the last parameter of the selected group.
   The middle and lower display will show:

   OFF
   dFLt.

   A.3) By ▲ or ▼ pushbuttons, select the "On" indication on the central display.
   A.4) Push the FUNC pushbutton.
   The central display will show:

   End

   The default parameter loading procedure for the selected group is ended.

B) When it is desired to load the default value of all the run time parameters (exception made for "Run rime group 8"[r.Hxx] and "Run time group P"), proceed as follows:
   B.1) By MENU pushbutton, select the "Run time group dF" [r.Lxx].
   B.2) Push the FUNC pushbutton.
   The middle and lower display will show:

   OFF
   dFLt.

   B.3) By ▲ or ▼ pushbuttons, select the "On" indication on the central display.

B.4) Push the FUNC pushbutton.
The middle display will show:

LOAd

and then it will show:

End

The default parameter loading procedure of all run time parameters is ended.

The following is a list of the default run time parameters loaded during the above procedure:

Run time group 2 [r.bxx]

PARAMETER	DEFAULT VALUE
SP	= Set point low limit ("rL" [r.E12])
Pr.St	= nonE
St.dY	= ñon
St.tñ	= 0.00 h.mm

Run time group 3 [r.Cxx]

PARAMETER	DEFAULT VALUE
ñ.rSt	= OFF
AL1	= Initial range value (for process alarm)
	= 0 (for deviation alarm)
	= 0.0 (for control output alarm)
bA1.L	= 0
bA1.h	= 0
AL2	= Initial range value (for process alarm)
	= 0 (for deviation alarm)
	= 0.0 (for control output alarm)
bA2.L	= 0
bA2.h	= 0
AL3	= Initial range value (for process alarm)
	= 0 (for deviation alarm)
	= 0.0 (for control output alarm)
bA3.L	= 0
bA3.h	= 0
AL4	= Initial range value (for process alarm)
	= 0 (for deviation alarm)
	= 0.0 (for control output alarm)
bA4.L	= 0
bA4.h	= 0
A.L.Fd	= Initial scale value
A.H.Fd	= Final scale value
HSA1	= 1
HSA2	= 1
HSA3	= 1
HSA4	= 1

Run time group 4 [r.dxx]

PARAMETER	DEFAULT VALUE
Pb	= 4.0 %
HYS	= 0.5 %
ti	= 4.00 mm.ss
td	= 1.00 mm.ss
IP	= 50.0 (If only one control output is configured). 0.0 (If two control outputs, without split range, are configured).
r.Gn	= 1.00
OLAP	= 0
Cn.Ac	= rEV
Pb 1	= 4.0 %
HYS 1	= 0.5 %
ti 1	= 4.00 mm.ss
td 1	= 1.00 mm.ss
IP 1	= 50.0 (If only one control output is configured). 0.0 (If two control outputs, without split range, are configured).
r.Gn 1	= 1.00
OLP.1	= 0
Pb 2	= 4.0 %
HYS 2	= 0.5 %
ti 2	= 4.00 mm.ss
td 2	= 1.00 mm.ss
IP 2	= 50.0 (If only one control output is configured). 0.0 (If two control outputs, without split range, are configured).
r.Gn 2	= 1.00
OLP.2	= 0
Pb 3	= 4.0 %
HYS 3	= 0.5 %
ti 3	= 4.00 mm.ss
td 3	= 1.00 mm.ss
IP 3	= 50.0 (If only one control output is configured). 0.0 (If two control outputs, without split range, are configured).
r.Gn 3	= 1.00
OLP.3	= 0
Pb 4	= 4.0 %
HYS 4	= 0.5 %
ti 4	= 4.00 mm.ss
td 4	= 1.00 mm.ss
IP 4	= 50.0 (If only one control output is configured). 0.0 (If two control outputs, without split range, are configured).
r.Gn 4	= 1.00
OLP.4	= 0

Pb 5	= 4.0 %
HYS 5	= 0.5 %
ti 5	= 4.00 mm.ss
td 5	= 1.00 mm.ss
IP 5	= 50.0 (If only one control output is configured). 0.0 (If two control outputs, without split range, are configured).
r.Gn 5	= 1.00
OLP.5	= 0

Run time group 5 [r.Exx]

PARAMETER	DEFAULT VALUE
ArW	= 100%
Sñ.tt	= 1.00 m
Sñ.db	= 5%
ñ.OLL	= 0.0%
ñ.OLH	= 100.0%
ñ.rñP	= Inf
ñC.CY	= 15 s (If relay output) 2 s (If SSR output)
S.OLL	= 0.0%
S.OLH	= 100.0%
S.rñP	= Inf
SC.CY	= 15 s (If relay output) 2 s (If SSR output)
rL	= Initial range value
rH	= Final range value
Grd1	= Inf
Grd2	= Inf
tOL	= Inf
E.Añ	= On
E.Lr	= On
E.rd	= On

Run time group 6 [r.Fxx]

PARAMETER	DEFAULT VALUE
A1.tP	= Proc
A1.Cn	= H.A.
A1.Ac	= rEV
A1.St	= OFF
A2.tP	= Proc
A2.Cn	= H.A.
A2.Ac	= rEV
A2.St	= OFF
A3.tP	= Proc
A3.Cn	= H.A.

A3.Ac	= rEV
A3.St	= OFF
A4.tP	= Proc
A4.Cn	= H.A.
A4.Ac	= rEV
A4.St	= OFF
Fd.Cn	= A.
Fd.Ac	= rEV

Run time group 7 [r.Gxx]

PARAMETER	DEFAULT VALUE
S.L.Pr	= ñbUS
S.L.Ad	= 1
S.L.bd	= 19.20
S.L.bF	= 8

Run time group 8 [r.Hxx]

The default calibration data are the complete potentiometer travel.
AFTER THE DEFAULT DATA LOADING OF THIS GROUP, IT IS NECESSARY TO PERFORM THE PROPER CALIBRATION

Run time group 9 [r.Ixx]

PARAMETER	DEFAULT VALUE
t.A.1	= 500
t.b.1	= 500
t.A.2	= 500
t.b.2	= 500
t.A.3	= 500
t.b.3	= 500
t.A.4	= 500
t.b.4	= 500
t.A.5	= 500
t.b.5	= 500
t.A.6	= 500
t.b.6	= 500
t.A.7	= 500
t.b.7	= 500
t.A.8	= 500
t.b.8	= 500
t.A.9	= 500
t.b.9	= 500
t.A.10	= 500
t.b.10	= 500

Run time group Hd [r.Lxx]

PARAMETER	DEFAULT VALUE
Pb.Lo	= 1.0%
Pb.Hi	= 300.0%
ti.Lo	= 00.20 mm.ss
ti.Hi	= 20.00 mm.ss
rG.CL	= OFF

DEFAULT CONFIGURATION AND USER PARAMETERS

When it is desired to load the default value of:
- the standard configuration parameters;
- the user setting of the run time and configuation parameters;

proceed as follows:

a) If the instrument starts in configuration mode, push the MENU pushbutton.

b) If the instrument starts in run time mode, by keeping depressed the MENU push-button for more than 5 seconds the instrument will show:

NOTE: If no push-button is depressed for more than 10 s (or 30 s according to "CnF.6" "t.out" [time out selection" C.I10] parameter setting), the instrument returns automatically to the normal display mode.

By ▲ or ▼ push-button select "ñodF."

NOTES:

1) When modify mode is started, the instrument stops the control and:
   - sets control outputs to OFF;

- turned OFF the bargraph displays (MKC only);
- sets analog retransmissions to the retransmitted initial scale value;
- sets alarms in no alarm condition;
- sets events to OFF;
- disables the serial link;
- the time out will be removed.

2) When the modify mode is disabled by V101 (SW3), the ▲ or ▼ push-button pressure has no effect.

Push MENU pushbutton again and select the: **Default configuration and user parameter setting group [C.Cxx]**
Upper display: ConF
Ranges: tb.1 =load the default configuration parameters of the table 1 (European)
tb.2 =load the default configuration parameters of the table 2 (American)
LOAd =load the user setting (all run time and configuration parameters)
SAVE=save the current setting of the run time and configuration parameters (as user default setting)
Lower display: dFlt when "Tb.1" or "Tb.2" is selected
USEr when "LOAd" or "SAVE" is selected
Push MENU pushbutton again.

The central display will show:

LOAd

and then the display will show:

CnF.1

InPt.

The default parameter loading procedure is ended.
The following is a list of the default configuration parameters of tb 1 and tb 2:

TABLE 1

Configuration group 1 [C.dxx]

PARAM.	VALUE	NOTES
Ln.Fr	50	Hz
ñ.In.t	3	TC K with °C
ñ.In.d	----.	(No decimal figure)
ñ.In.S	dIS	Disabled
ñ.In.L	- 100	°C
ñ.In.H	1370	°C
OFSt	0	°C
dS.FL	0	(No filter)

A.In.F	nonE	
A.In.t	4-20	mA
A.In.L	0	°C
A.In.H	1000	°C
A.I.FL	0	(No filter)

Configuration group 2 [C.Exx]

PARAM.	VALUE	NOTES
O1.Fn	ñAin	If servo motor drive is not mounted
	ALr.1	If servo motor drive or linear output is mounted
O2.Fn	ALr.2	
O3.Fn	nonE	If option is not mounted
	ñC.Sñ	If servo motor drive is mounted
	ALr.3	If option is mounted
O4.Fn	nonE	If option is not mounted
	ALr.4	If option is mounted
Sñ.tP	CLSd	If feedback circuitry is mounted
	OPEn	If feedback circuitry is not mounted
FEEd	no.Fb	
O5.Fn	nonE	If option is not mounted
	ñAin	If option is mounted
O5.rn	4-20	4-20 mA
O5.Lr	0	°C
O5.Hr	1000	°C
O5.FL	0	No filter
O6.Fn	nonE	If option is not mounted
	SP.rt	If option is mounted
O6.rn	4-20	4-20 mA
O6.Lr	0	°C
O6.Hr	1000	°C
O6.FL	0	(No filter)

Configuration group 3 [C.Fxx]

PARAM.	VALUE	NOTES
SPLt.	dIS	
ñC.Gn	2.00	
ñC.bS	-50.0	
SC.Gn	2.00	
SC.bS	0.0	
ñC.Cn	norñ	
ñ.SCL	nO	
ñC.dP	----.	(No decimal figure)
ñC.E.L	0	
ñC.E.H	100	
C.A.C	bEFr	
SC.Cn	norñ	
S.SCL	nO	

SC.dP	----.	(No decimal figure)
SC.E.L	0	
SC.E.H	100	
SC.A.C	bEFr	

Configuration group 4 [C.Gxx]

PARAM.	VALUE	NOTES
Sñ.Fn	Enb	
Cn.tP	PId	
ñAn.F	Enb	
Añ.UL	buñ.	
ñ.A.t.t	buñ.	
St.Fn	Cnd.b	
St.Pr	Edit	
St.tk	0	
SF.Cn	Std.	
SF.UL	0.0	

Configuration group 5 [C.Hxx]

PARAM.	VALUE	NOTES
d1.Fn	nonE	
d1.St	OPEn	
d2.Fn	nonE	
d2.St	OPEn	
d3.Fn	nonE	
d3.St	OPEn	
I1.Fn	nonE	
I1.St	OPEn	
I2.Fn	nonE	
I2.St	OPEn	
I3.Fn	nonE	
I3.St	OPEn	
I4.Fn	nonE	
I4.St	OPEn	
I5.Fn	nonE	
I5.St	OPEn	
I6.Fn	nonE	
I6.St	OPEn	
I7.Fn	nonE	
I7.St	OPEn	
I8.Fn	nonE	
I8.St	OPEn	
F.E.01	Brk.E	
S.E.01	OPEn	
F.E.02	Brk.E	
S.E.02	OPEn	
F.E.03	Brk.E	
S.E.03	OPEn	
F.E.04	Brk.E	
S.E.04	OPEn	

F.E.10	nonE
S.E.10	OPEn
F.E.11	nonE
S.E.11	OPEn
F.E.12	nonE
S.E.12	OPEn
F.E.13	nonE
S.E.13	OPEn
F.E.14	nonE
S.E.14	OPEn
F.E.15	nonE
S.E.15	OPEn
F.E.16	nonE
S.E.16	OPEn
F.E.17	nonE
S.E.17	OPEn
F.E.18	nonE
S.E.18	OPEn
F.E.19	nonE
S.E.19	OPEn
t.E.CY	30
t.E.Pr	30

Configuration group 6 [C.lxx]

PARAM.	VALUE	NOTES
G.brG	DEv	
O.brG	P.Out	
brG.L	-100	°C
brG.H	1370	°C
brG.d	10	°C
SP.AL	n.ALG	
SP.dS	OP.SP	
Sr.bH	bAL	
SS.tr	-100	°C
t.out	tñ.10	
Fd.Fn	nonE	If option is not mounted or main control output is linear
	ñC.On	If option is mounted
Fd.HS	25	
Fd.Ou	nonE	

TABLE 2

Configuration group 1 [C.dxx]

PARAM.	VALUE	NOTES
Ln.Fr	60	Hz
ñ.In.t	18	(TC K with °F)
ñ.In.d	----.	(No decimal figure)
ñ.In.S	dIS	Disabled
ñ.In.L	-150	°F
ñ.In.H	2500	°F
OFSt	0	°F
dS.FL	0	(No filter)
A.In.F	nonE	
A.In.t	4-20	mA
A.In.L	32	°F
A.In.H	1832	°F
A.I.FL	0	(No filter)

Configuration group 2 [C.Exx]

PARAM.	VALUE	NOTES
O1.Fn	ñAin	If servo motor drive is not mounted
	ALr.1	If servo motor drive or linear output is mounted
O2.Fn	ALr.2	
O3.Fn	nonE	If option is not mounted
	ñC.Sñ	If servo control motor drive is mounted
	ALr.3	If option is mounted
O4.Fn	nonE	If option is not mounted
	Alr.4	If option is mounted
Sñ.tP	CLSd	If feedback circuitry is mounted
	OPEn	If feedback circuitry is not mounted
FEEd	no.Fb	
O5.Fn	nonE	If option is not mounted
	ñAin	If option is mounted
O5.rn	4-20	4-20 mA
O5.Lr	32	°F
O5.Hr	1832	°F
O5.FL	0	No filter
O6.Fn	nonE	If option is not mounted
	SP.rt	If option is mounted
O6.rn	4-20	4-20 mA
O6.Lr	32	°F
O6.Hr	1832	°F
O6.FL	0	(No filter)

Configuration group 3 [C.Fxx]

PARAM.	VALUE	NOTES
SPLt.	dIS	
ñC.Gn	2.00	
ñC.bS	-50.0	
SC.Gn	2.00	
SC.bS	0.0	
ñC.Cn	norñ	
ñ.SCL	nO	
ñC.dP	----.	(No decimal figure)
ñC.E.L	0	
ñC.E.H	100	
ñC.A.C	bEFr	
SC.Cn	norñ	
S.SCL	nO	
SC.dP	----.	(No decimal figure)
SC.E.L	0	
SC.E.H	100	
SC.A.C	bEFr	

Configuration group 4 [C.Gxx]

PARAM.	VALUE	NOTES
Sñ.Fn	Enb	
Cn.tP	Pld	
ñAn.F	Enb	
Añ.UL	buñ.	
ñ.A.t.t	buñ.	
St.Fn	Cnd.b	
St.Pr	Edit	
St.tk	0	
SF.Cn	Std.	
SF.UL	0.0	

Configuration group 5 [C.Hxx]

PARAM.	VALUE	NOTES
d1.Fn	nonE	
d1.St	OPEn	
d2.Fn	nonE	
d2.St	OPEn	
d3.Fn	nonE	
d3.St	OPEn	
I1.Fn	nonE	
I1.St	OPEn	

I2.Fn	nonE
I2.St	OPEn
I3.Fn	nonE
I3.St	OPEn
I4.Fn	nonE
I4.St	OPEn
I5.Fn	nonE
I5.St	OPEn
I6.Fn	nonE
I6.St	OPEn
I7.Fn	nonE
I7.St	OPEn
I8.Fn	nonE
I8.St	OPEn
F.E.01	Brk.E
S.E.01	OPEn
F.E.02	Brk.E
S.E.02	OPEn
F.E.03	Brk.E
S.E.03	OPEn
F.E.04	Brk.E
S.E.04	OPEn
F.E.10	nonE
S.E.10	OPEn
F.E.11	nonE
S.E.11	OPEn
F.E.12	nonE
S.E.12	OPEn
F.E.13	nonE
S.E.13	OPEn
F.E.14	nonE
S.E.14	OPEn
F.E.15	nonE
S.E.15	OPEn
F.E.16	nonE
S.E.16	OPEn
F.E.17	nonE
S.E.17	OPEn
F.E.18	nonE
S.E.18	OPEn
F.E.19	nonE
S.E.19	OPEn
t.E.CY	30
t.E.Pr	30

Configuration group 6 [C.Ixx]

PARAM.	VALUE	NOTES
G.brG	DEv	
O.brG	P.Out	
brG.L	-150	°F
brG.H	2500	°F
brG.d	10	°F
SP.AL	n.ALG	
SP.dS	OP.SP	
Sr.bH	bAL	
SS.tr	-150	°F
t.out	tñ.10	
Fd.Fn	nonE	If option is not mounted or main control output is linear
	ñC.On	If option is mounted
Fd.HS	25	
Fd.Ou	nonE	
En.Ck	nonE	
HYtñ	0.01 h.mm	

SSi Super Systems

Cincinnati, OH
800-666-4330
http://www.supersystems.com

Manual Part No. 31090 20Q

Copyright © 2001 Super Systems Inc.